HONDA
The Power of Dreams

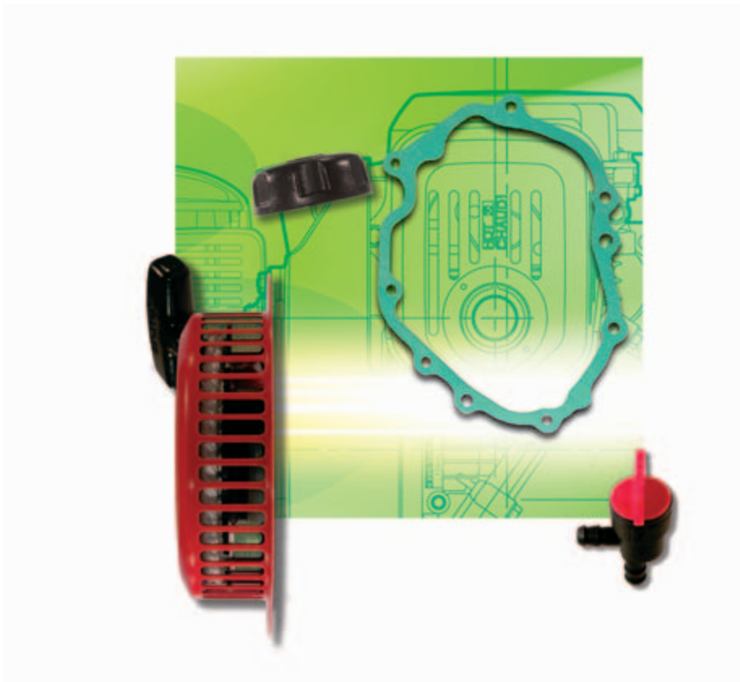

PR293-PEE-ENG3

Honda Europe NV
Langerbruggestraat 104
B-9000 Gent

www.honda-engines-eu.com

© www.iotta.com

PR293-PEE-ENG3

HONDA
The Power of Dreams

Honda Engines Parts & Accessories

A genuine part can make the difference

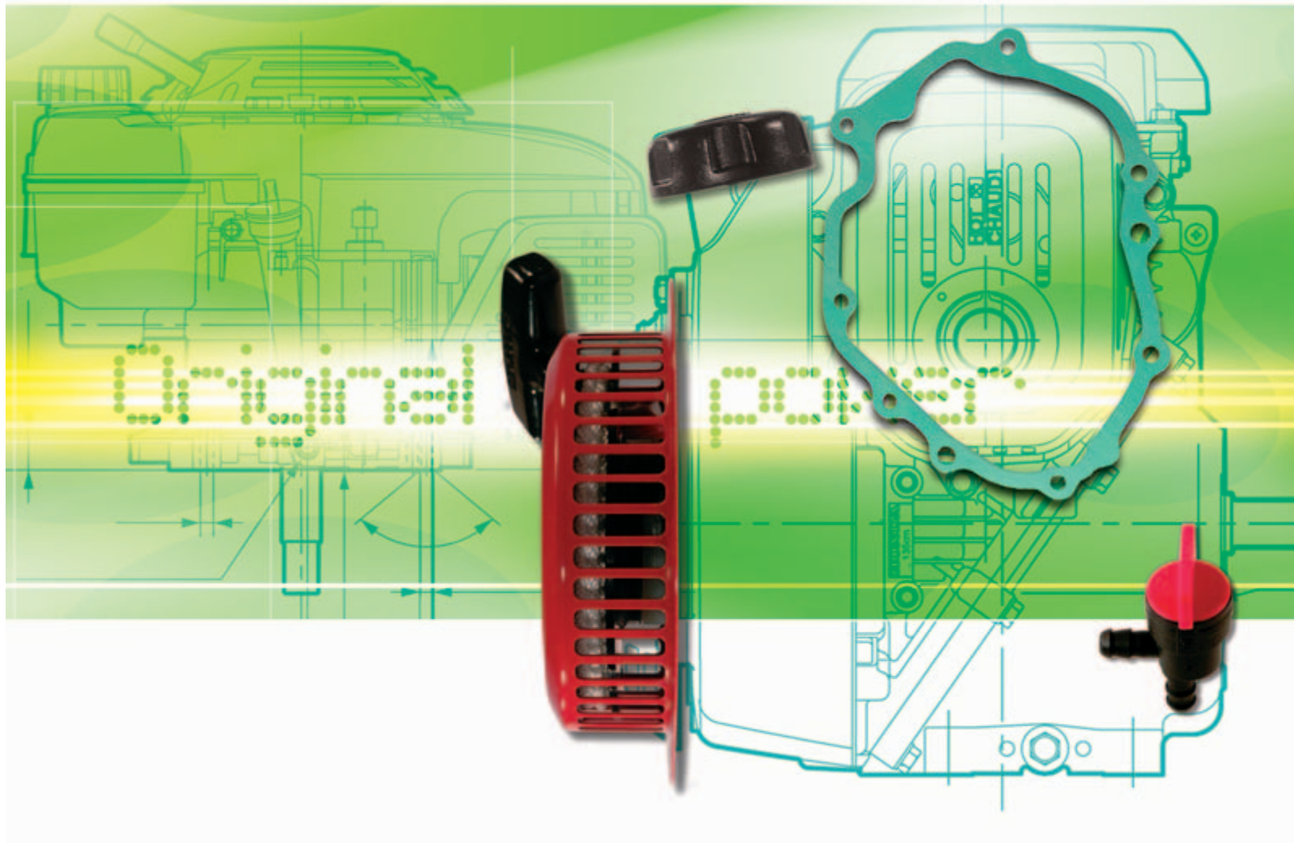

HOP
Honda Original Parts

Engine models

Engine model	Model code	Engine serial no	
		From	To
G100K1	G100-	2000001	2424874
G100K2	G100-	3000001	9999999
G150	G150-	1000001	9000000
G150K1	G150-	9100001	9999999
G200	G200-	1000001	9000000
G200K1	G200-	9100001	9999999
GC135	GCAJ-	1000001	9999999
GC160	GCAH(A)-	1000001	9999999
GC190A	GCAAA-	1000001	9999999
GX22	GCAF-	1000001	9999999
GX31	GCAG-	1000001	9999999
GX35	GCACM-	1000001	9999999
GX35T	GCAMT-	1000001	9999999
GX35N	GCAEK-	1000001	9999999
GX35NT	GCAST-	1000001	9999999
GX25	GCAAM-	1000001	9999999
GX25N	GCAD(/V)K-	1000001	9999999
GX25T	GCAL(/P/N)T-	1000001	9999999
GX25NT	GCART-	1000001	9999999
GXH50	GCAL-	1000001	9999999
GXH50U	GCAFK-	1000001	9999999
GX100	GCANM-	1000001	9999999
GX100U	GCAGK-	1000001	9999999
GX120K1	GC01-	2000001	9999999
GX120T1	GCAAT-	1000001	9999999
GX120U1	GCAHK-	1000001	9999999
GX120UT1	GCAGT-	1000001	9999999
GX160K1	GC02-	2000001	9999999
GX160T1	GCABT-	1000001	9999999
GX160U1	GCACK-	1000001	9999999
GX160UT1	GCAFT-	1000001	9999999
GX160UH1	GCABH-	1000001	9999999
GX200	GCAE-	1000001	9999999
GX200T	GCACT-	1000001	9999999
GX200U	GCAJK-	1000001	9999999
GX200UT	GCAHT-	1000001	9999999

Engine model	Model code	Engine serial no	
		From	To
GX240K1	GC04-	3000001	9999999
GX240U1	GCAKK-	1000001	9999999
GX270	GCAB-	1000001	9999999
GX270U	GCALK-	1000001	9999999
GX270UT	GCAJT-	1000001	9999999
GX340K1	GC05-	2000001	9999999
GX340U1	GCAMK-	1000001	9999999
GX360K1	GA01-	1100001	9999999
GX390T1	GCAET-	1000001	9999999
GX390K1	GCAA-	2000001	9999999
GX390U1	GCANK-	1000001	9999999
GX390UT1	GCAKT-	1000001	9999999
GX440IU	GCAWK-	1000001	9999999
GX640	GAAD-	1000001	9999999
GX610	GCAC-	1000001	1999999
GX620	GCAD-	1000001	1999999
GX610K1	GCAC-	2000001	9999999
GX610U1	GCAPK-	1000001	9999999
GX620K1	GCAD-	2000001	9999999
GX620U1	GCARK-	1000001	9999999
GX670	GCAM-	1000001	9999999
GX670U	GCASK-	1000001	9999999
GS160A	GCABA-	1000001	9999999
GS190A	GCACA-	1000001	9999999
GV100K1	GV100-	2000001	2999999
GV100K2	GV100-	910001	9999999
GCV135	GJAF-	1000001	9999999
GCV135E	GJAFE-	1000001	9999999
GCV160A	GJAEA-	1000001	9999999
GCV160	GJAE-	1000001	9999999
GCV190A	GJAAA	1000001	9999999
GCV520	GJAKM-/GJANM-	1000001	9999999
GCV530	GJAJM-/GJAMM-	1000001	9999999
GXV50	GJAG-	1000001	9999999
GXV50U	GJAAK-	1000001	9999999
GXV120	GXV120-	1000001	9999999
GXV140	GJAB-	6000001	9999999
GXV160	GJ03-	1000001	5999999
GXV160K1	GJ03-	6000001	9999999
GXV160H2	GJAAH	1000001	9999999
GXV160UH2	GJABH-	1000001	9999999
GXV270K1	GJ01-	2000001	9999999
GXV340T2	GJABT	1000001	9999999
GXV340K1	GJ02-	1100001	5999999
GXV340K2	GJ02-	6000001	9999999
GXV340UT2	GJACT-	1000001	9999999
GXV390T1	GJAAT	1000001	9999999
GXV390K1	GJAA-	6000001	9999999
GXV390UT1	GJADT-	1000001	9999999
GXV520	GJAPM-	1000001	9999999
GXV530	GJARM-	1000001	9999999
GXV530U	GJAEK-	1000001	9999999
GXV610	GJAC-	1000001	1999999
GXV620	GJAD-	1000001	1999999
GXV610K1	GJAC-	2000001	9999999
GXV620K1	GJAD-	2000001	9999999
GXV620U1	GJAGK-	1000001	9999999
GXV670	GJAH-	1000001	9999999
GXV670U	GJAHK-	1000001	9999999
GSV160A	GJABA	1000001	9999999
GSV190A	GJACA	1000001	9999999

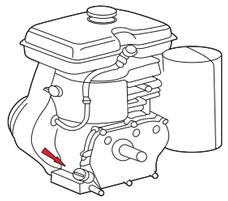
G 100/150/200

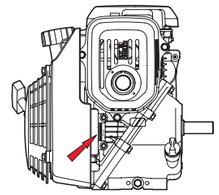
GC 135/160/190 - GS 160/190

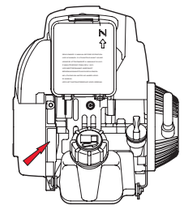
GX 22/31

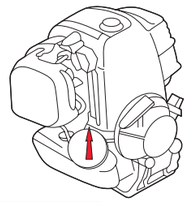
GX 25/35

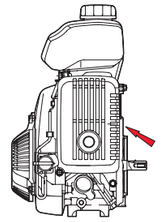
GXH 50

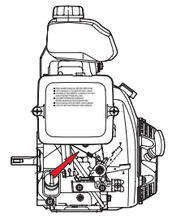
GX 100

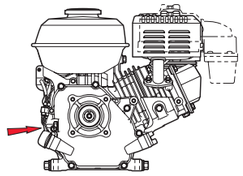
GX 120/160/200/240/270/340/390

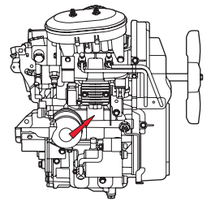
GX 360K1 - GX640

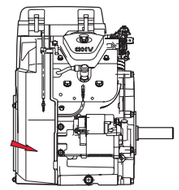
GX 610/620/670

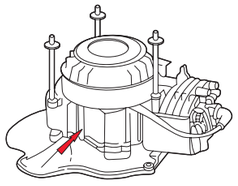
GV 100

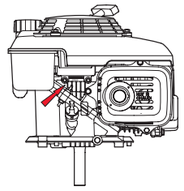
GCV 135/160/190 - GSV 160/190

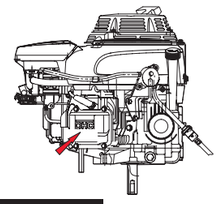
GCV 520/530

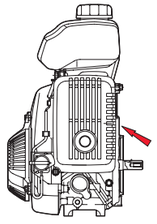
GXV 50

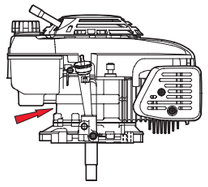
GXV 120/140/160 - GXV 160K1

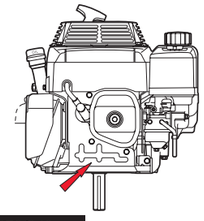
GXV 270/340

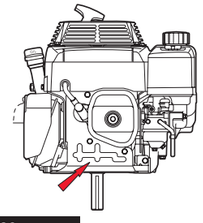
GXV 390

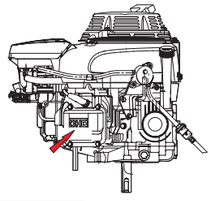
GXV 520/530

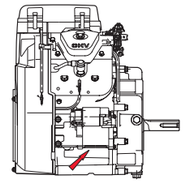
GXV 610/620/670

Recoil starting system

Engine model	REF. 1 Starter ratchet	REF. 2 Return spring	REF. 3 Reel	REF. 4 Starter spring	REF. 5 Case comp.	REF. 6 Grip	REF. 7 Complete starter assy.
G 100K1	28422-896-010	28443-896-000	28420-ZG0-004	28442-ZE6-003	28410-ZG0-014ZB(RED)	28461-ZH8-003	28400-ZG0-004ZG (RED)
G 100K2					28410-ZG0-014ZG(RED)/ZA(BLACK)		28400-ZG0-004ZG (RED) ZA (BLACK)
G 150	28422-883-020	-	28420-889-010	28442-883-000	28410-883-030ZC (RED)	28461-883-000	28400-883-040ZC (RED)
G 150K1	28422-883-T20	-	28421-883-T20	28442-883-T20	28410-883-T20ZD (RED)	28461-883-T20	28400-883-N00ZA (RED)
G 200	28422-883-020	-	28420-889-010	28442-883-000	28410-883-030ZC (RED)	28461-883-000	28400-883-040ZC (RED)
G 200K1	28422-883-T20	-	28421-883-T20	28442-883-T20	28410-883-T20ZD (RED)	28461-883-T20	28400-883-N00ZA (RED)
GC 135	-	-	-	-	-	28461-ZL8-003	28400-ZL8-023ZA (BLACK) ZC (RED)
GC 160	-	-	-	-	-		
GS 160A							
GS 190A							
GC 190A	-	-	-	-	-		
GX 22	-	-	28421-ZM3-003	28442-ZM3-003	28414-ZM3-003	28461-ZM3-003	28400-ZM3-003ZA
GX 31	-	-					
GX 35	-	-	28421-ZM3-003	28442-ZM3-003	-		28400-Z0Z-003
GX 35T	-	-			28414-Z0Z-000		
GX 35N	-	-					
GX 35NT	-	-					
GX 25	-	-	28421-Z0H-003	28442-Z0H-003	28414-Z0H-003		28400-Z0H-003
GX 25T					28414-Z0H-801		28400-Z0H-801
GX 25N							
GX 25NT					28414-Z0H-003		28400-Z0H-003
GXH 50	-	-	28421-ZM7-003	-	28414-ZM7-003	28461-ZM3-003	28400-ZM7-003
GXH 50U	-	-		28442-ZL8-003		28461-ZH8-003	
GX 100 STD	-	-	-	-	-	28461-Z0D-003	28400-Z0D-003ZB (BLACK) ZC (RED)
GX 100 TAMP	28422-ZG0-W02	-	28421-Z0D-V02	28442-ZH8-003	28410-Z0D-V02ZA	28461-ZH8-003	28400-Z0D-V03ZA (BLACK)
GX 100 U		-				-	
GX 120 U1	28422-ZH8-801	28443-ZH8-801	28421-ZH8-801	28442-ZH8-003	28410-ZH8-003YA (RED) 003ZB (BLACK)		28400-ZH8-023YA (RED) 023ZB (BLACK)
GX 120UT1							
GX 120K1	28422-ZH8-013	28443-ZH8-003	28420-ZH8-013		28410-ZH8-003YA (RED) ZB (BLACK)		28400-ZH8-013YA (RED) 023ZB (BLACK)
GX 120T1					28410-ZH8-003YA (RED)		28400-ZH8-013YA(RED)
GX 160K1						28461-ZH8-003	
GX 160T1							
GX 160H1	28422-ZH8-013	28443-ZH8-013	28420-ZH8-013	28442-ZH8-003	28410-ZH8-003YA	28461-ZH8-003	28400-ZH8-013YA
GX 160U1	28422-ZH8-801	28443-ZH8-801	28421-ZH8-801	28442-ZH8-003	28410-ZH8-003YA(RED) ZB (BLACK)	28461-ZH8-003	28400-ZH8-023YA (RED) 023ZB (BLACK)
GX 160UT1							
GX 200	28422-ZH8-013	28443-ZH8-003	28420-ZH8-013	28442-ZH8-003	28410-ZH8-003YA (RED)	28461-ZH8-003	28400-ZH8-013YA
GX 200T1							
GX 200U							
GX 200UT							
GX 240K1	28422-ZE2-W01	28443-ZE2-W01	28421-ZE2-W01	28442-ZE2-W01	28410-ZE2-W01ZN (RED) ZB (BLACK)	28461-ZE2-W02	28400-ZE2-W01ZN (RED) ZB (BLACK)
GX 240U1							
GX 270							
GX 270U							
GX 270UT							
GX 340K1			28421-ZE3-W01		28410-ZE3-W01ZP (RED) ZB (BLACK)		28400-ZE3-W01ZP (RED) ZB (BLACK)
GX 340U1							
GX 390T1							
GX 390UT1							
GX 390U1							
GX 390K1							
GX 360K1	NO RECOIL STARTER, ONLY WITH STARTER MOTOR						
GX 640							
GX 440 IU	28422-ZH8-801	28443-ZH8-801	28420-Z2E-003	28442-Z2E-003	28410-Z2E-0032A	28461-Z2E-003	28400-Z2E-003ZA
GX 610	28422-ZE2-W01	28443-ZE2-W01	28421-ZE3-W01	28442-ZE2-W01	28410-ZE3-W01ZP (RED) ZB (BLACK)	28461-ZE2-W02	28400-ZE3-W01ZP (RED) ZB (BLACK)
GX 620					28410-ZE3-W01ZB(BLACK)		28400-ZE3-W01ZB(BLACK)
GX 610K1							28400-ZE3-W01ZP (RED) ZB (BLACK)
GX 610U1							
GX 620K1					28410-ZE3-W01ZP (RED) ZB (BLACK)		28400-ZE3-W01ZP (RED) ZB (BLACK)
GX 620U1							
GX 670	NO RECOIL STARTER, ONLY WITH STARTER MOTOR						
GX 670U							
GV 100K1	28422-896-010	-	28420-ZG1-702	28442-ZE6-003	28410-ZG1-702ZD (RED)	28461-ZE7-T00	28400-ZG1-T12ZC (RED) ZB (BLACK)
GV 100K2	28422-ZL1-003		28421-ZL1-003	28442-ZH8-003	-		28400-ZL1-003
GCV 135	-	-	-	-	-	28461-ZL8-003	28400-ZM0-633ZA(BLACK)
GCV 135E							
GCV 160A							28400-ZL8-023ZA (BLACK) ZC (RED)
GCV 160							28400-ZM0-633ZA(BLACK)
GSV 160A							28400-ZM0-633ZA (BLACK) ZD (RED)
GSV 190A							28400-Z0Y-013ZA (RED) ZB (BLACK)
GCV 190A							28400-Z0Y-013ZA (RED) ZB (BLACK)
GCV 520	NO RECOIL STARTER, ONLY WITH STARTER MOTOR						
GCV 530							
GXV 50	-	-	28421-ZM7-003	-	28414-ZM7-003	28461-ZM3-003	28400-ZM7-003
GXV 50U				28442-ZL8-003			
GXV 120	28422-896-010	28443-896-000	28420-ZE6-003	28442-ZE6-003	28410-ZE6-003ZE(RED)/ZB(BLACK)	28461-ZE1-003	28400-ZE6-003ZE (RED) ZB (BLACK)
GXV 140	28485-ZE6-T02	28486-ZE6-T02	-	-	-	28461-ZE6-T02	28400-ZG9-803
GXV 160	28422-896-010	28443-896-000	28420-ZE7-003	28442-896-700	28410-ZE7-003ZD (RED)	28461-ZE1-003	28400-ZE7-003ZC (RED)
GXV 160H2							
GXV 160UH2							
GXV 160K1	28485-ZE6-T02	28486-ZE6-T02	-	-	-	28461-ZE7-T00	28400-ZG9-803
GXV 270K1	28422-ZE2-W01	28443-ZE2-W01	28421-ZE3-W01	28442-ZE2-W01	28410-ZE8-004ZD(RED)/ZA(BLACK)	28461-ZE2-W02	28400-ZE8-004ZD (RED) ZA (BLACK)
GXV 340K1					28410-ZE8-004ZD(RED)		28400-ZE8-004ZD (RED)
GXV 340T2			28421-ZE3-W01		28410-ZE3-W01ZP (RED)		28400-ZE3-W01ZP (RED)
GXV 340UT2							
GXV 340K2			28421-ZE8-821		28410-ZE3-W01ZP (RED) ZB (BLACK)		28400-ZE3-W01ZP (RED) ZB (BLACK)
GXV 390T1			28421-ZE3-W01		28410-ZE3-W01ZP (RED)		28400-ZE3-W01ZP (RED)
GXV 390UT1							
GXV 390K1							
GXV 520	NO RECOIL STARTER, ONLY WITH STARTER MOTOR						
GXV 530							
GXV 530U							
GXV 610	28422-ZE2-W01	28443-ZE2-W01	28421-ZE3-W01	28442-ZE2-W01	28410-ZE3-W01ZP (RED) ZB (BLACK)	28461-ZE2-W02	28400-ZE3-W01ZP (RED) ZB (BLACK)
GXV 620							
GXV 610K1					28410-ZE3-W01ZP (RED)		28400-ZE3-W01ZP (RED)
GXV 620K1					28410-ZE3-W01ZP (RED) ZB (BLACK)		28400-ZE3-W01ZP (RED) ZB (BLACK)
GXV 620U1							
GXV 670	NO RECOIL STARTER, ONLY WITH STARTER MOTOR						
GXV 670U							

REF. 1

REF. 2

REF. 3

REF. 4

REF. 5

REF. 6

REF. 7

Fuel system

Engine model	REF.	Fuel tank cap
G 100K1, G 100K2, G 150K1, G 200K1, GX 120K1 / T1, GX 160K1 / T1, GX 200 / T1 / U, GX 240 / K1 / U1, GX 270 / U, GX 340K1 / U1, GX 390K1 / T1 / U1 / UT1, GX 610	1bis	17620-ZH7-023
G 150, G 200	1bis	17620-883-T70
GX 120T1, GX 160T1, GX 200T / UT	1a	17620-Z0T-813
GX120U1, GX120UT1	1a	17620-Z0T-305
GX22, GX31, GX25, GX25T, GX35, GX35T	1	17620-ZM3-053
GX25N, GX25NT, GX35N, GX35NT	1	17620-ZM3-816
GXH50, GX50U	1	17620-ZL8-013
GX160H1	1	17620-Z1T-800
GX160U1	1	17620-Z0T-305
GX160UT1	1	17620-Z0T-813
GX440IU	1	17620-Z2E-000
GX 620	1	17620-899-013
GX 620K1 / U1	1	17620-ZJ1-840
GV 100K1	1	17620-ZG1-000
GXV50, GXV50U	1	17620-ZV0-020
GXV120, GXV160, GXV160K1 / H2 / UH2, GXV270K1, GXV340K1, GXV340K2 / T2 / UT2, GXV390K1 / T1 / UT1	1	17620-ZE7-000
GV100K2, GXV140, GC135, GC160, GS160, GS190, GC190, GX100, GX100U, GCV135, GCV160, GCV190, GSV160, GSV190	1	17620-ZL8-013
Engine model		**Fuel filter**
G 100K1, G 150, G 200	2	17672-880-000
GX22, GX25, GX25T, GX25N, GX25NT, GX31, GX35, GX35T, GX35N, GX35NT	3	17672-Z0H-003
GX620, GX620K1 / U1	2	17672-899-000
GXV270K1, GXV340K2 / T2 / UT2, GX120K1 / T1, GX160K1 / T1, GX200 / T / U / UT, GX240K1 / U1, GX270 / U, GX340K1 / U1, GX390K1 / T1 / U1 / UT1, G100K2, G150K1, G200K1	2	17672-ZE2-W01
Engine model		**Fuel cock**
GX 160K1, GX 200 / U	4	16950-898-633
GX 620	4	16950-ZA0-023
GX 610, GX 620K1 / U1	4	16950-YA0-802
GV 100K2	5	16950-ZL1-000
GCV 135, GCV 160, GXV 140, GXV 50, GSV 160, GSV 190	5	04103-Z0L-000
G 150, G 200	4	16950-883-663
G 150K1, G 200K1	4	16950-883-T03

** = diameter of body fuel filter inside fuel tank*

REF. 1bis

REF. 1a

REF. 1

REF. 2

REF. 3

REF. 4

REF. 5

Gasket

Engine model	Gasket kit	Cylinder head gasket	Oil pan packing	Head cover packing	Exhaust pipe gasket
GV100K2	-	12281 ZC0 003	11381 ZL1 000	12375 ZG1 000	
GXV120	06111-ZE6-406	12251-ZE6-000	11381-ZG9-J60	12391-ZE7-M10	18381-ZE6-800
GXV140	06111-ZG9-406	12251-ZG9-000	11381-ZG9-T00		18381-ZG9-M00
GXV160	06111-ZE7-406	12251-ZE7-000	11381 ZE7 M10		
GXV160K1	061A1-ZE7-T00				
GXV160H2 / UH2					18381-ZE6-820
GXV270K1	06111-ZE8-405	12251-ZE8-020	11381-ZE9-801	12391-ZE8-000	18333-ZE3-800
GXV340K1	-	12251-ZE9-600			
GXV340K2 / T2 / UT2	06111-ZE9-V01				
GXV390K1	-	12251-ZF5-000			
GXV390T1 / UT1	-	12251-ZF5-H01			
G100K1	06111-ZG0-405	12281-ZG0-003	11381 ZG0 800	12375 ZG0 010	18381 ZG0 800
G100K2	06111-ZG0-406	12281-ZC0-003			
G150	06111-887-406	12281-887-306	11381 883 800	12375 887 000	18381 883 800
G150K1	-				
G200	06111-883-405	12281-883-801		12375 883 000	
G200K1	-				
GX120K1 / T1	06111-ZH7-405	12251-ZH7-800	11381-ZH7-800	12391 ZE1 000	18381 ZH8 800
GX120U1	06111-ZH7-405				
GX120UT1					
GX160H1	06111-ZH8-405	12251-Z1T-003	11381-ZL0-000		18381-Z1T-003
GX 160U1		12251-ZF1-800			18381-ZH8-800
GX160UT1					
GX160K1 / T1	06111-ZH8-405				
GX200 / T / U / UT	06111-ZL0-000	12251-ZL0-003			
GX240K1 / U1	06111-ZE2-408	12251-ZE2-800	11381-ZE2-801	12391 ZE2 020	18381 ZE2 800
GX270 / U	06111-ZH9-405	12251-ZH9-000			
GX340K1 / U1	06112-ZE3-405	12251-ZE3-W00	11381-ZE3-801		
GX390K1 / T1 / U1/ UT1	06111-ZF6-R81	12251-ZF6-W00			
GX440IU		12251-Z2E-003			18381-Z2E-000
GX610 / 620	061A1-ZJ1-000	12251-ZJ1-003	11381-ZJ1-000	12391-ZJ1-000	18333-ZJ1-000
GX610 / 620 K1 / U1		12251-ZJ1-841	11381-ZJ1-840	12391-ZE2-020	18333 ZE3 800

Important: Oil seals for crankshaft and flywheel are not included in the gasket kit

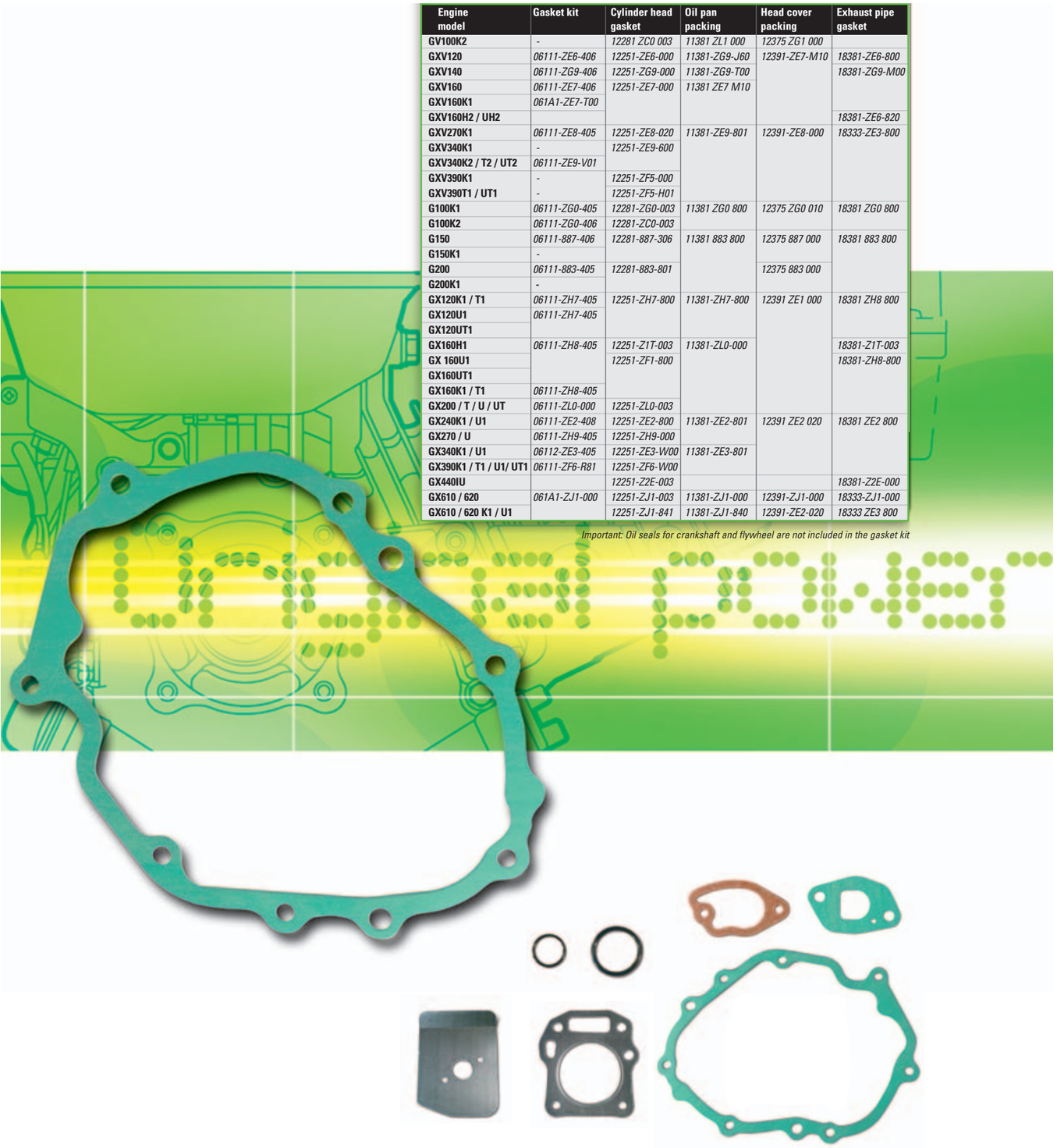

Piston

Engine model	REF. 1 Piston	Bore diameter in mm	REF. 2 Ring set	REF. 3 Piston pin	REF. 4 Piston clip	REF. 5 Con.rod std	Con.rod (-025)
G 100K1	13101-ZG0-003*	48	13010-ZG0-003*	13111-892-000	13115-147-000	13200-ZG0-000	13200-ZG0-305
G 100K2	13101-ZC0-003*		13010-ZC0-003*				
G 150	13101-887-003*	64	13010-887-000*	13111-883-000	94601-15000	13200-887-505	13200-887-507
G 150K1		64				13200-887-050	-
G 200	13101-883-003*	67	13010-YA0-004*			13200-883-060	13200-883-506
G 200K1		67	13010-883-003*				13200-883-345
GC 135	13101-ZL8-000	64	13010-ZL8-003	13111-ZE0-000	90551-ZE0-000	13200-ZL9-000	-
GC 160						13200-ZL8-000	-
GC 190	13101-Z0Y-000	69	13010-Z0Y-004	13111-Z0Y-000	90551-ZE0-000	13200-Z0Y-000	
GX 22	13101-ZM3-030	33	13010-ZM3-000	13111-ZM3-000	-	-	-
GX 31	13101-ZM5-030	39	13010-ZM5-000	13111-ZM5-000			
GX 25	13101-Z0H-000	35	13010-Z0H-000	13111-Z0H-000			
GX25T							
GX25N							
GX25NT							
GX 35	13101-Z0Z-000	39	13010-ZM5-000	13111-ZM5-000	-	-	-
GX 35T					-	-	-
GX 35N					-	-	-
GX 35NT					-	-	-
GXH 50	13101-ZM7-010	41,8	13010-ZM7-000	13111-GS7-000	13115-147-000	13200-ZM7-000	-
GXH 50U				13111-122-000			
GX 100 STD	13101-Z0D-000	56	13010-Z0D-003	13111-ZE0-000	90551-ZE0-000	13200-Z0D-000	13200-Z0D-305
GX 100 TAMP							
GX 100 U							
GX 120K1	13101-ZH7-010*	60	13010-ZK7-V02*			13200-ZE0-000	-
GX 120U1			13010-ZH7-003				
GX 120UT1	13101-Z0S-810*	60	13010-Z0S-801*			13200-Z0S-800	
GX 120T1							
GX 160K1	13101-ZH8-010*	68	13010-ZH8-941*	13111-ZE1-000	90551-ZE1-000	13200-ZE1-010	-
GX 160T1	13101-Z0T-810*	68	13010-ZL0-003*			13200-Z0T-800	
GX160H1	13101-ZH8-010*	68	13010-Z1T-003*	13111-Z1T-000			-
GX160U1		68	13010-ZL0-003*	13111-ZE1-000		13200-ZE1-010	-
GX160UH1	13101-Z0T-810*	68	13010-Z0T-801*			13200-Z0T-800	-
GX 200 / U	13101-ZL0-010*	68	13010-ZL0-003*			13200-ZE1-010	132A0-ZE1-000
GX 200T / UT	13101-Z0T-800*	68	13010-Z0T-801*			13200-Z0T-800	
GX 240K1 / U1	13101-ZE2-W00*	73	13010-ZE2-013*	13111-ZE2-000		13200-ZE2-010	13200-ZE2-305
GX 270 / U	13101-ZH9-000*	77	13010-ZE8-601*				
GX 340K1 / U1	13101-ZE3-W00*	82	13010-ZE3-003*	13111-ZF6-000	90601-ZE3-000	13200-ZE3-020	13200-ZE3-315
GX 390K1 / U1	13101-ZF6-W00*	88	13010-ZF6-003*	13111-ZF6-W00			
GX 390T1 / UT1		88	13010-Z1C-800*		90601-ZE3-000	13200-Z1C-000	
GX 360K1	13101-ZA0-010*	58	130A1-ZA0-004*	13111-881-000	94601-14000	13210-ZA0-000	-
GX440IU	13101-Z2E-000	88	13010-Z2E-003	1311-Z2E-000	94601-21000	13200-Z2E-000	-
GX 640	13101-ZG8-000*	76	13010-ZG8-004*	13111-ZG8-000	94601-19000	13210-ZG8-000	-
GX 610	13101-ZJ1-000*	77	13010-ZE8-601*	13111-ZJ1-000	90551-ZE1-000	13210-ZJ1-000	-
GX 620							
GX 610K1 / U1	13101-ZJ1-840*		13010-ZJ1-841*	13111-ZJ1-840	94601-18000	13200-ZJ1-841	
GX 620K1 / U1							
GX 670 / U	13101-ZN1-000*					13200-ZN1-003	
GS 160	13101-Z2A-000	64	13010-Z2A-004	13111-ZE0-000	90551-ZE0-000	13200-ZL8-000	
GS 190	13101-Z0Y-000	69	13010-Z2C-004	13111-Z0Y-000		13200-Z0Y-000	
GV 100K1	13101-ZC0-003	52	13010-ZG1-U11	13111-892-000	13115-147-000	13200-ZG0-000	-
GV 100K2							
GCV 135	13101-ZL8-000	64	13010-ZL8-003	13111-ZE0-000	90551-ZE0-000	13200-ZL8-000	-
GCV 135E							
GCV 160A							
GCV 160							
GCV 190	13101-Z0Y-000	69	13010-Z0Y-004	13111-Z0Y-000		13200-Z0Y-000	
GCV 520	13101-Z0A-000	77	13010-Z0A-014	13111-ZJ1-840	90551-ZE1-000	13200-Z0A-003	-
GCV 530	13101-Z0A-800		13010-ZJ1-841				
GXV 50	13101-ZM7-010	41,8	13010-ZM7-000	13111-GS7-000	13115-147-000	13200-ZN4-000	-
GXV 50U				13111-122-000			
GXV 120	13101-ZE6-033*	60	13010-ZE6-013*	13111-ZJ1-840	90551-ZE1-000	13200-Z0A-003	-
GXV 140	13101-ZG9-010*	64	13010-ZG9-003*	13111-ZE0-000	90551-ZE0-000	13200-ZE6-010	
GXV 160	13101-ZE7-020*	68	13010-ZF1-024*	13111-ZE1-000	90551-ZE1-000	13200-ZE7-000	13200-ZE7-305
GXV 160K1			13010-ZF1-023*				-
GXV 160H2 / UH2	13101-ZH8-010*	68	13010-ZL0-003*	13111-Z1T-000	90551-ZE1-000	13200-Z1V-000	
GXV 270K1	13101-ZE8-010*	77	13010-ZE8-601*	13111-ZE2-000		13200-ZE8-010	13200-ZE8-305
GXV 340K1	13101-ZE3-000*	82	13010-ZE3-003*	13111-ZF6-000	90601-ZE3-000	13200-ZE9-020	13200-ZE9-315
GXV 340T2 / UT2	13101-ZE3-W00*		13010-Z1F-800*			13200-Z1E-000	13200-Z1E-305
GXV 340K2			13010-ZE3-003*		90601-ZE3-000	13200-ZE9-020	13200-ZE9-315
GXV 390T1 / UT1	13101-ZF6-W00*	88	13010-Z1C-800*			13200-Z1E-000	13200-Z1E-305
GXV 390K1		88	13010-ZF6-003*			13200-ZE9-020	13200-ZE9-315
GXV 520	13101-Z0A-000	77	13010-Z0A-003	13111-ZJ1-840	90551-ZE1-000	13200-Z0A-801	-
GXV 530 / U							
GXV 610	13101-ZJ1-000*	77	13010-ZE8-601*	13111-ZJ1-000		13210-ZJ1-000	-
GXV 620							
GXV 610K1	13101-ZJ1-840*		13010-ZJ1-841*	13111-ZJ1-840	94601-18000	13200-ZJ1-841	
GXV 620K1 / U1							
GXV 670 / U	13101-ZN1-000*			13111-ZJ1-840		13200-ZN1-003	
GSV 160	13101-Z2A-000	64	13010-Z2A-004	13111-ZE0-000	90551-ZE0-000	13200-ZL8-000	
GSV 190	13101-Z0Y-000	69	13010-Z2C-004	13111-Z0Y-000		13200-Z0Y-000	

** = oversize pistons/rings sets are available*

REF. 1

REF. 2

REF. 3

REF. 4

REF. 5

Ignition coil

Engine model	REF.	Ignition coil
G 100K1	1	30500-ZG0-813
G 100K2	1	30500-ZG0-W01
G 150	3	30560-887-T00
G 150K1	1	30500-883-R51
G 200	3	30560-883-015
G 200K1	1	30500-883-R51
GC 135	1	30500-ZL8-004
GC 160		
GC 190		30500-Z0J-003
GX 22	1	30500-ZM3-003
GX 31		
GX 35		30500-Z0Z-013
GX 35T	1	30500-Z3F-003
GX 35N		30500-Z0Z-013
GX 35NT		30500-Z3F-003
GX 25		30500-Z0H-023
GX25T	1	30500-Z3E-003 (30500-Z0H-801 type TEZ-TEZR)
GX25N	1	30500-Z0H-023 (30500-Z0H-801 type TZR3-TZ3)
GX25NT	1	30500-Z3E-003
GXH 50	1	30500-ZM7-004
GXH 50U	1	
GX 100 STD	1	30500-Z0D-013
GX 100 TAMP	1	30500-Z0D-V02
GX 100 U		
GX 120K1	2	30500-ZE1-063
GX 120U1		
GX 120T1		30500-Z0T-801
GX 120UT1		
GX 160K1		30500-ZE1-063
GX 160T1		30500-Z0T-801
GX 160H1		30500-Z1T-003
GX 160U1		30500-ZE1-063
GX 160UT1		30500-Z0T-801
GX 200 / U		30500-ZE1-063
GX 200T / UT		30500-Z0T-801
GX 240K1 / U1	2	30500-ZF6-W02
GX 270 / U		
GX 340K1 / U1		
GX 390K1 / U1		
GX 390T1 / UT1		
GX 360K1	5	30500-ZA0-701 (CYL. 1 + CYL. 2)
GX440IU	6	30520-Z2E-003
GX 640	3	30500-ZG8-003 (CYL. 1 + CYL. 2)
GX 610	2	30500-ZJ1-023(CYL.1)/30550-ZJ1-023(CYL.2)
GX 620		
GX 610K1 / U1	2	30500-ZJ1-844(CYL.1)/30550-ZJ1-844(CYL.2)
GX 620K1 / U1		
GX 670 / U		
GS 160	1	30500-Z0J-003
GS 190		
GV 100K1	1	30500-ZG1-U10
GV 100K2		30500-ZL1-004
GCV 135	1	30500-ZL8-004
GCV 135E		
GCV 160A		
GCV 160		
GCV 190		30500-Z0J-003
GCV 520	1	30500-Z0A-033(CYL.1)/30550-Z0A-033(CYL.2)
GCV 530		
GXV 50	1	30500-ZM7-004
GXV50 U		
GXV 120	2	30500-ZG9-M04
GXV 140	1	30500-ZG9-801
GXV160	2	30500-ZE7-063
GXV 160H2 / UH2	2	30500-Z1V-003
GXV 160K1		30500-ZG9-801
GXV 270K1	2	30500-ZF5-003
GXV 340K1	2	30500-ZE9-L33
GXV 340K2		
GXV 340T2 / UT2		30500-Z1E-013
GXV 390T1 / UT1		
GXV 390K1		30500-ZE9-L33
GXV 520	1	30500-Z0A-033(CYL.1)/30550-Z0A-033(CYL.2)
GXV 530 / U		
GXV 610	2	30500-ZJ1-013
GXV 620		
GXV 610K1	2	30500-ZJ1-844(CYL.1)/30550-ZJ1-844(CYL.2)
GXV 620K1 / U1		
GXV 670 / U		
GSV 160	1	30500-Z0J-003
GSV 190		

REF. 1

REF. 2

REF. 3

REF. 4

REF. 5

REF. 6

Aircleaner

Engine model	REF.	Aircleaner	Outer filter	Dimensions			Material / shape
				Long.	Width	Height	
G 100K1, G100K2	1	17211-896-000		94	76	25	urethane, rectangle
G 150, G 200	2	17211-883-010		120	120	40	urethane, round
G 150K1, G 200K1	3	17211-883-W21	17218-883-W21	178	89	29	paper, rectangle
GC 135/160/190, GS 160/190, GCV 135/160/190, GSV 160/190	3	17211-ZL8-023		133	115	21	paper, rectangle
GX 25, GX 25T, GX 25N, GX 25NT, GX 35	4	17211-Z0H-000		76	83	20	urethane, +/- oval
GX 25T, GX 25N, (type T3, TZ3, TZR3)	4	17211-Z0H-800		76	83	20	urethane, +/- oval
GX 35T, GX 35N, GX 35NT	4	17211-Z0Z-000		100	70	25	urethane, +/- oval
GX 22, GX 31	5	17211-ZM3-000		72	72	20	urethane, round
GXH 50, GXH 50U, GXV 50, GXV 50U	1	17211-ZM7-000		89	89	12	urethane, square
GX 100 STD, GX 100 TAMPER, GX 100U	3	17211-ZL8-023	17218-Z0D-000	133	115	21	paper, rectangle
GX 120K1, GX 120T1, GX 120U1, GX 120UT1	6	17210-ZE0-505*	17218-ZE0-505	102	74	52	paper,oval(out filt.urethane)
GX 160K1, GX 160T1, GX 160H1, GX 160U1, GX 160UT1, GX 200, GX 200T, GX 200U, GX 200UT	6	17210-ZE1-505*	17218-ZE1-507	102	74	71	paper,oval(out filt.urethane)
GX 240K1, GX 270, GX 240U1, GX 270U	6	17210-ZE2-515*	17218-ZE2-505	155	121	40	paper,oval(out filt.urethane)
GX 340K1, GX 390K1, GX 390T1, GX 340U1, GX 390U1, GX 390UT1	6	17210-ZE3-505*	17218-ZE3-505	112	97	92	paper,oval(out filt.urethane)
GX 360K1	6	17210-ZA0-506	17218-ZA0-506	165	105	40	paper,oval(out filt.urethane)
GX 640	7	06172-ZG8-L20	17218-ZG8-000	186	174	34	paper, rectangle
GX 610, GX 620, GXV 610, GXV 620	7	17010-ZJ1-000	17218-ZJ1-000	238	183	32	paper, rectangle
GX 610K1 / U1, GX 620K1 / U1, GX 670 / U, GXV 610K1, GXV 620K1 / U1, GXV 670 / U	8	17210-ZJ1-842	17218-ZJ1-840	225	167	30	paper, rectangle
GV 100K1	9	17211-ZG1-700		130	75	25	urethane, +/-rectangle
GV 100K2	9	17211-ZL1-000		120	70	25	urethane, +/-rectangle
GCV 520, GCV 530, GXV 520, GXV 530, GXV 530U	8	17211-Z0A-013	17218-Z0A-810	215	120	22	paper, rectangle
GXV 120	6	17210-ZE6-505*	17218-ZE6-505	190	62	50	paper,oval(out filt.urethane)
GXV 140	7	17211-ZG9-800	17218-ZG9-800	137	61	25	paper, rectangle
GXV 160	6	17210-ZE7-505*	17218-ZE6-505	190	63	45	paper,oval(out filt.urethane)
GXV 160K1, GXV 160H2, GXV 160UH2	6	17211-ZE7-W03*	17218-ZE7-W02	180	62	50	paper,oval(out filt.urethane)
GXV 270K1, GXV 340K1/K2	6	17210-ZF5-505	17218-ZF5-505	124	60	87	paper, oval
GXV 340K2, GXV 340T2 / UT2, GXV390K1, GXV 390T1 / UT1	6	17211-ZF5-V01	17218-ZF5-V00	124	60	87	paper, oval
GX 440IU	6	17210-Z2E-000		102	74	71	paper,oval(out filt.urethane)

* = aircleaner + outer filter

REF. 1

REF. 2

REF. 3

REF. 4

REF. 5

REF. 6

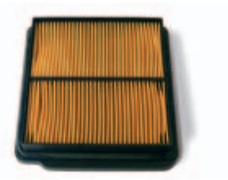
REF. 7

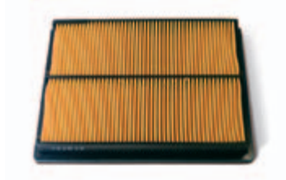
REF. 8

REF. 9

Oilfilter

Oilfilter

Engine model	Oilfilter	Ø	Height	Material
GXV 340K2, GXV 610, GXV 610K1 / U, GXV 620, GXV 620K1 / U1, GXV 670 / U, GX 610, GX 610K1 /U1, GX 620K1 / U1, GX 670 / U	15400-ZJ1-004	83	82	metal, cyl.
GX 360K1, GCV 520, GCV 530, GXV 520, GXV 530	15400-PFB-014	65	65	metal, cyl.
GX 640	15400-PFB-007	69	72	metal, cyl.
GXV 340K1, GXV 390	15400-RBA-F01	65	85	metal, cyl.

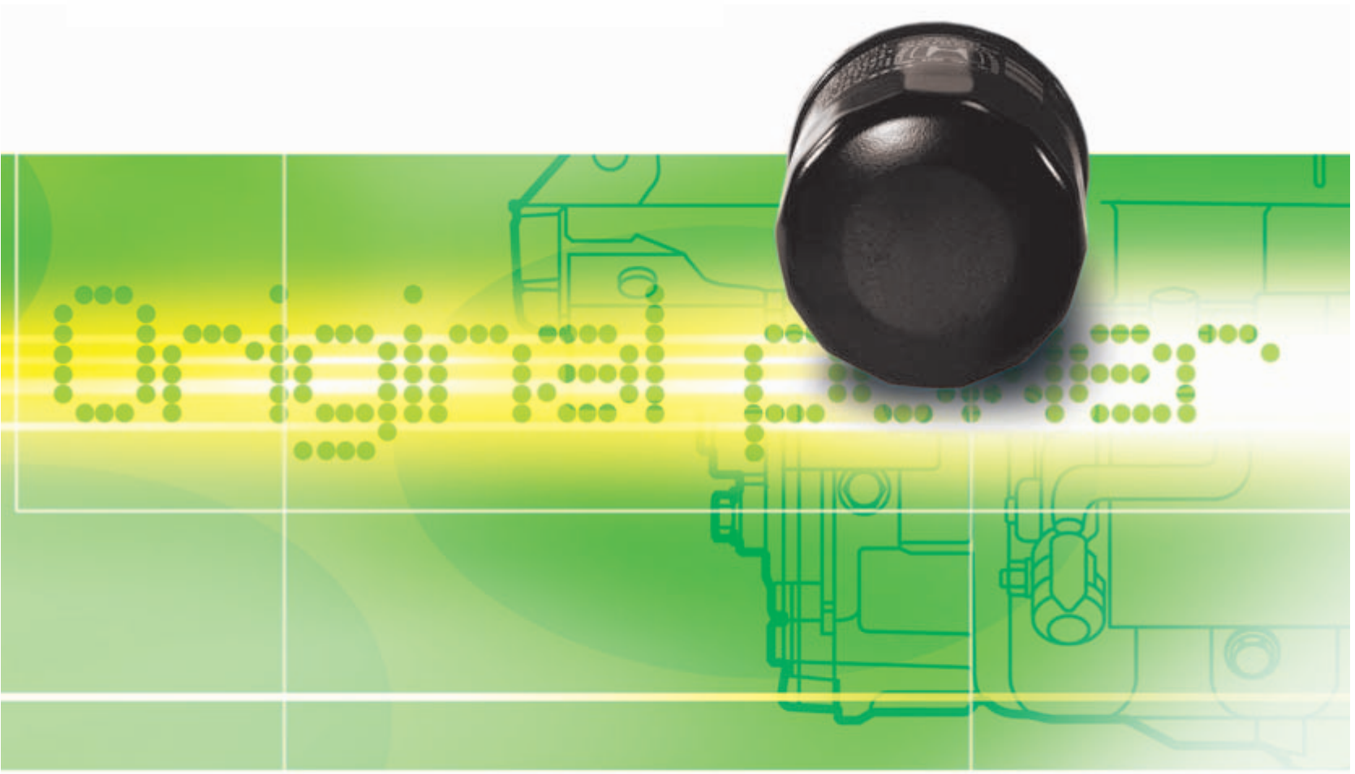

Fuel strainer

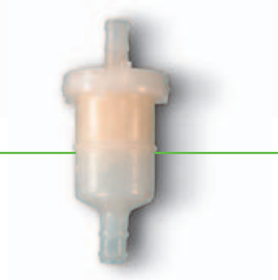

Fuel strainer

Engine model	Fuel strainer	Small Ø	Big Ø	Height	Material
GCV 530, GC 135, GC 160, GC 190, GXV 520, GXV 530 / U	16910-ZV4-015	22	29	67	plastic
GX 100, GX 120K1 / T1, GX 160K1 / T1, GX 200 / T1 / U / UT, GX 240K1 / U1, GX 270 / U, GX 360K1, GX 390K1 / T1 / U1 / UT1	16910-GB2-005	23	30	53	plastic
GXV 340K1, GXV 340K2, GXV 390K1, GXV 610, GXV 610K1, GXV 620, GXV 620K1, GXV 670, GX 360K1, GX 610, GX 610K1, GX 620, GX 620K1, GX 670, G 100K1, G 100K2, GXV 270K1	16910-ZE8-015	22	29	65	plastic
G 100K2	16910-ZG0-U02	22	29	64	plastic
GXV 160H2 / UH2	16952-ZA8-800	23	30	53	plastic
GXV 390T1 / UT1	16952-ZE6-000	23	30	53	plastic

Spark plugs

Engine model	ND	NGK
G100K1	98073-54754	98073-54744
G100K2		9873-54776
G150	98076-54720	98076-54716
G150	98076-54821 CDI	98076-54911 CDI
G150K1	98076-54780	98076-54710
G200	98076-54720	98076-54716
G200	98076-54921 CDI	98076-54914 CDI
G200K1	98076-54780	98076-54710
GC135		98079-56846
GC160		98079-56846
GC190		98079-56846
GS160		98079-56846
GS190		98079-56846
GX22	98056-55757	98056-55777
GX31		98056-55777
GX25		31915-Z0H-003
GX25T		31915-Z0H-003
GX25N		31915-Z0H-003
GX25NT		31915-Z0H-003
GX35		31915-Z0H-003
GX35T		31915-Z0H-003
GX35N		31915-Z0H-003
GX35NT		31915-Z0H-003
GXH50		98056-55777
GXH50U	98056-55757	9805655777
GX100STD	98056-55757	98056-55777
GX100TAMP	98056-55757	98056-55777
GX100U	98056-55757	98056-55777
GX120K1	98079-56855	98079-56846
GX120U1	98079-56855	98079-56846
GX120T1	98079-56855	98079-56846
GX120UT1	98079-56855	98079-56846
GX160K1	98079-56855	98079-56846
GX160T1	98079-56855	98079-56846
GX160H1	98079-55855	98079-56846
GX160U1	98079-54855	98079-54846
GX160UT1		98079-56876
GX200	98079-56855	98079-56846
GX200U	98079-56855	98079-56846
GX200T	98079-56855	98079-56846
GX200UT	98079-56855	98079-56846
GX240K1	98079-56855	98079-56846
GX240U1	98079-56855	98079-56846
GX270	98079-56855	98079-56846
GX270U	98079-56855	98079-56846
GX340K1	98079-56855	98079-56846
GX340U1	98079-56855	98079-56846
GX390K1	98079-56855	98079-56846
GX390U1	98079-56855	98079-56846
GX390T1	98079-56855	98079-56846
GX390UT1	98079-56855	98079-56846
GX360K1		98076-54747
GX340K1	98079-55155	98079-55145
GX440IU	98079-5785C	98079-5787C
GX610	98079-56855	98079-56846
GX620	98079-56855	98079-56846
GX610K1	98079-5585V	98079-5587V
GX610U1	98079-5585V	98079-5587V
GX620K1	98079-5585V	98079-5587V
GX620U1	98079-5585V	98079-5587V
GX670	98079-5585V	98079-5587V
GX670U	98079-5585V	98079-5587V
GV100K1	98073-54754	98073-54744
GV100K2		98073-54776
GCV135		98079-56846
GCV160		98079-56846
GCV190		98079-56846
GCV520	98079-55855	98079-56846
GCV530	98079-55855	98079-56846
GSV160		98079-56846
GSV190		98079-56846
GXV50	98056-55757	98056-55777
GXV50U	98056-55757	9805655777
GXV120	98079-55855	98079-55846
GXV140		98079-55846
GXV160	98079-55855	98079-55846
GXV160K1	98079-55855	98079-55846
GXV160H2	98079-55855	98079-55846
GXV160UH2	98079-55855	98079-55846
GXV270K1	98079-55855	98079-55846
GXV340K1	98079-55855	98079-55846
GXV340K2		98079-55846
GXV340T2		98079-55846
GXV340UT2		98079-55846
GXV390K1		98079-55846
GXV390T1		98079-55846
GXV390UT1		98079-55846
GXV520	98079-55855	98079-55846
GXV530	98079-55855	98079-55846
GXV530U	98079-55855	98079-55846
GXV610		98079-55846
GXV620		98079-55846
GXV610K1	98079-5585V	98079-5587V
GXV620K1	98079-5585V	98079-5587V
GXV620U1	98079-5585V	98079-5587V
GXV670	98079-5585V	98079-5587V
GXV670U	98079-5585V	98079-5587V

Spark plug

Oil

Parts reference	Quantity
08221-888-060HE	1 x 0,6L
08221-888-100HE	1 x 1L
08221-888-060MP	24 x 0,6L
08221-888-100MP	24 x 1L

Service Kit

Parts reference	Quantity
06211-ZL8-000	1
06211-ZL8-000MP	12 x 1

Accessoires

Cable holder	GX 10 000 000	p. 14
11 liter fuel tank	17500-GX1-11L	p. 15
18 liter fuel tank	17500-GX1-18L	p. 15
Oil dipstick (205 mm)	GX 120-K10-05	p. 16
Oil dipstick (225 mm)	GX 160-K10-06	p. 17
Oil dipstick (370 mm)	GX 160-K10-26	p. 17
Oil dipstick (255 mm)	GX 340-390-K18 / GX 270-000-07	p. 18
Oil dipstick	GX 390-K10-01	p. 19
En-guard (plastic type) no deflector	06185-ZF6-W400	p. 20
En-guard (plastic type) with deflector	06185-ZF6-W500	p. 21
En-guard (plastic type) no deflector	06185-ZH8-W400	p. 22
En-guard (plastic type) with deflector	06185-ZH8-W500	p. 23
En-guard (metal type) no deflector	06185-ZH8-W600	p. 24
En-guard no deflector	06185-ZK9-W400	p. 25
En-muffler guard (plastic type) with deflector	06185-ZK9-W500	p. 26
Universal muffler for v-twin engine	06183-ZJ1-BOSU	p. 27
Top mount muffler	06183-ZJ1-BOSL	p. 27
Top mount muffler	06183-ZJ1-BOSR	p. 28
Heat shield	18434-ZJ1-BOS	p. 28
Deflector (90°)	18431-ZH8-BOS	p. 29
Exhaust flange	GX620-000001	p. 29
Exhaust pipe	18331-Z0A-SET	p. 30
Deflector (long type)	18431-ZH8-W500	p. 30
Deflector (short type)	GX20-000-00	p. 31
Low noise muffler	18310-ZB8-SIL	p. 31
Pipe comp., ex. (high-r)	18330-ZJ1-841	p. 32
Pipe comp., ex. (high-l)	18330-ZJ1-851	p. 32
Pipe comp., ex. (side-l)	18330-ZJ1-861	p. 33
Spark arrester	18355-ZN1-003	p. 33
Joint assy., connecting tube	17415-ZJ1-840	p. 34
Valve, oil shut-off	15558-ZJ1-010AH	p. 34
Switch, oil pressure	37240-ZG3-E01	p. 35
Dual function hour & tacho meter	08174-ZL8-000HE	p. 35
Screen grid (p.t.o.)	28454-ZJ1-KIT	p. 36
Shaft, fr. p.t.o.	23311-ZJ1-KIT	p. 36
Switch assy, engine stop	35120-Z2E-003	p. 37
Switch assy combination (remote, with fuse)	35100-Z2E-003	p. 37
Switch assy combination (remote, w/o fuse)	35100-Z2E-X010	p. 38
Volume assy, speed	35570-Z2E-004	p. 38
Extension harness, for combination switch assy with fuse	35105-Z2E-X000	p. 39
Extension harness assy, subwire (6p & 3 terminals)	32105-Z2E-X000	p. 39
Ext. harness assy, subwire (6p & 6p)	32105-Z2E-X010	p. 40
Coupler, short (switch 1 function)	32130-Z2E-0001	p. 40
6p, gray (volume switch), male	6187-6809	p. 41
6p, gray (volume switch), female	6180-6187	p. 41
4p, blue (communication port), male	6187-4445	p. 42
4p, blue (communication port), female	6180-4185	p. 42
Dummy plug	7160-9465	p. 43
Wire seal	7160-8234	p. 43
Terminal, male	1500-0105	p. 43
Terminal, female	1500-0106	p. 43
2p coupler kit (female)	9845F-00002-00	p. 44
2p coupler kit (male)	9835F-10002-00	p. 44
Str govern (overwrite kit)	IGXST-KIT	p. 45
V-twin winter kit	06192-ZJ1-800	p. 46

Cable holder

Remote throttle operation for	Partnumber	Packing
GX 120K1, 120T1 / 160K1, 160T1 / 200, 200T / 240K1 / 270, 270T / 340K1 / 390K1, 390T1 / GX 610K1 / 620K1 / 670	GX 10 000 000	50 pieces/set

REF.	Component name	QTY
1	screw (M4 x 8)	1
2	cable holder	1
3	E-ring	1

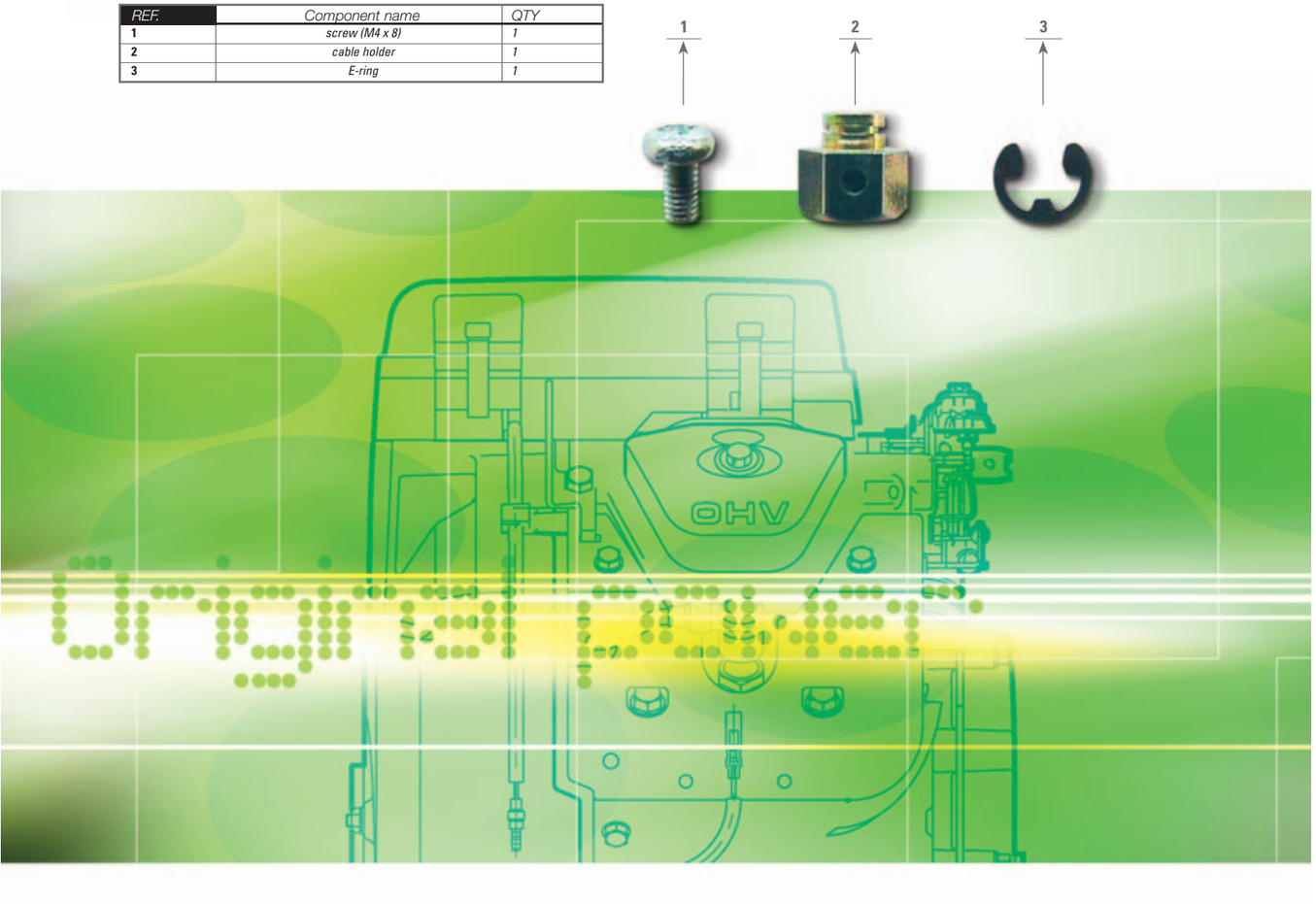

11 liter fuel tank

Partnumber	Packing
17500-GX1-11L	1 piece/set

REF.	Component name	QTY
1	fuel tank comp.	1
2	fuel filler cap comp.	1
3	fuel meter assy.	1
4	flat screw 5x10	2
5	fuel cock assy.	1

Height = 140 mm
(measured without fuel filler cap comp. and fuel cock assy.)

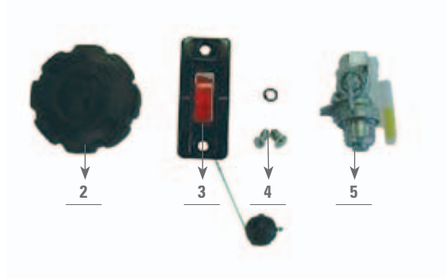

18 liter fuel tank

Partnumber	Packing
17500-GX1-18L	1 piece/set

REF.	Component name	QTY
1	fuel tank comp.	1
2	fuel filler cap comp.	1
3	fuel meter assy.	1
4	flat screw 5x10	2
5	fuel cock assy.	1

Height = 135 mm
(measured without fuel filler cap comp. and fuel cock assy.)

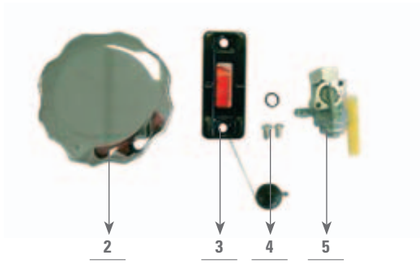

Oil dipstick (205 mm)

Extension of oil level gauge for	Partnumber	Packing
GX 120K1, 120T1	GX 120-K10-05	1 piece/set

REF.	Component name	QTY
1	oil level dipstick	1
2	screw	1
3	collar	1
4	stay	1

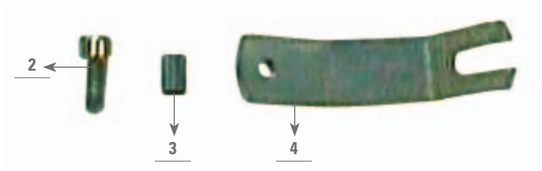

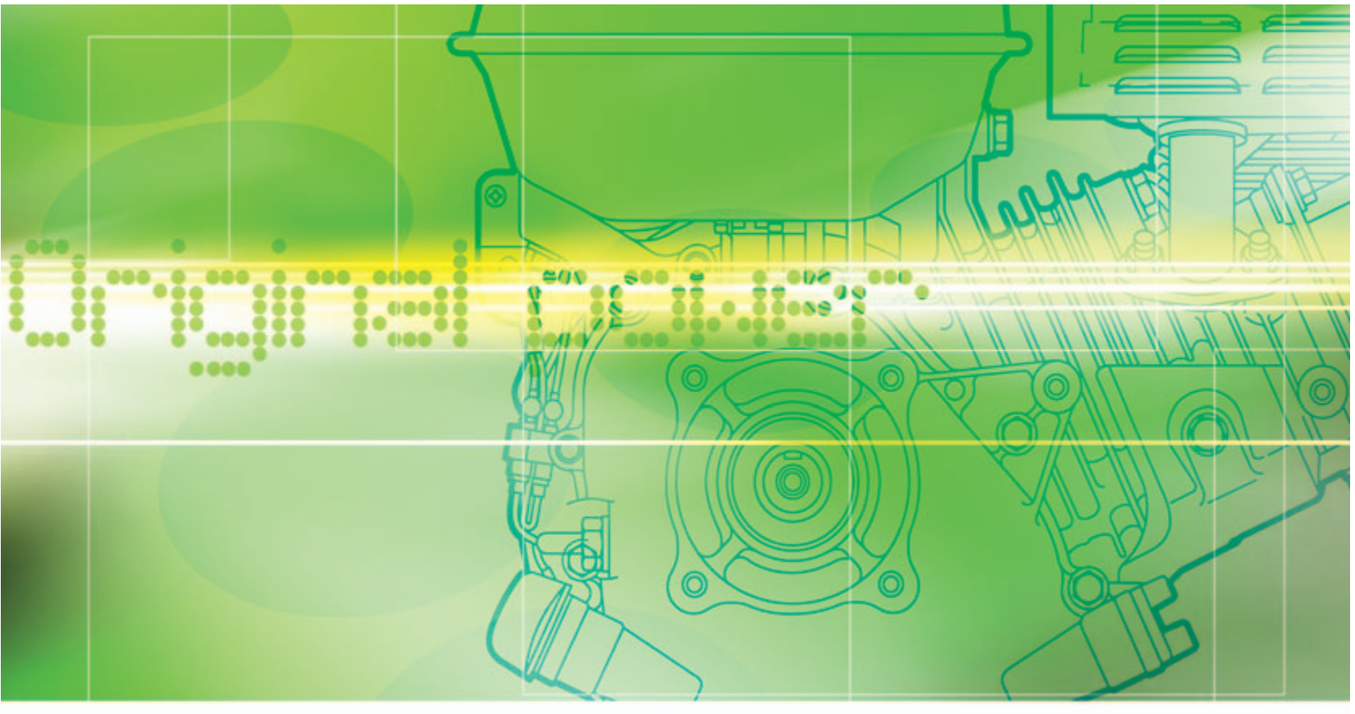

Oil dipstick (225 mm)

Extension of oil level gauge for	Partnumber	Packing
GX 160K1, 160T1 / GX200, 200T	GX 160-K10-06	1 piece/set

REF.	Component name	QTY
1	oil level dipstick	1
2	screw	1
3	collar	1
4	stay	1

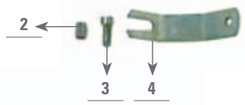

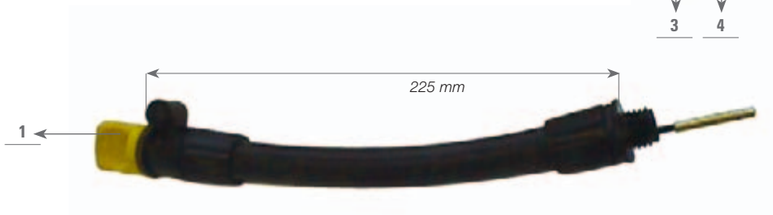

Oil dipstick (long)

Extension of oil level gauge for	Partnumber	Packing
GX 120K1, 120T1 / GX 160K1, 160T1 / GX 200, 200T / GX 240K1 / GX 270, 270T / GX 340K1 / GX 390K1, 390T1	GX 160-K10-26	1 piece/set

REF.	Component name	QTY
1	oil level dipstick	1
2	screw	1
3	collar	1
4	stay	1

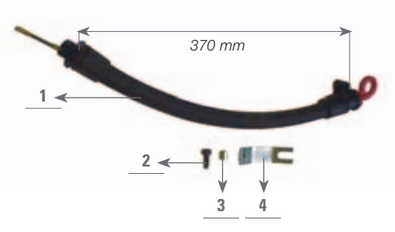

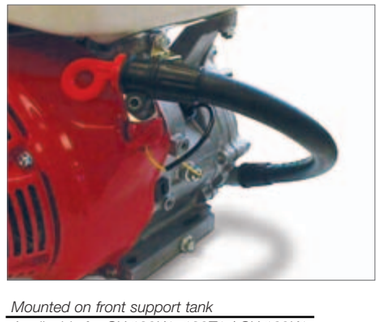

Mounted on front support tank
Applicable for GX 120K1, 120T1 / GX 160K1, 160T1 / GX 200, 200T

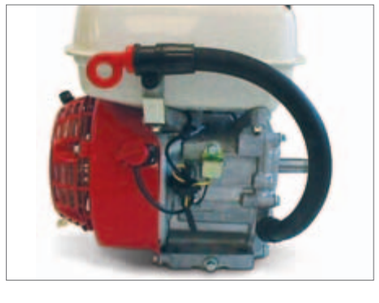

Applicable for GX 240K1 / GX 270, 270T / GX 340K1 GX 390K1, 390T1

Oil dipstick (255 mm)

Extension of oil level gauge for	Partnumber	Packing
GX 120K1, 120T1 / GX 160K1, 160T1 / GX 200, 200T / GX 240K1 / GX 270, 270T / GX 340K1 / GX 390K1, 390T1	GX 340-390-K18/ GX 270-000-07	1 piece/set

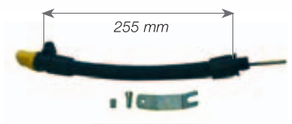

GX 270-000-07

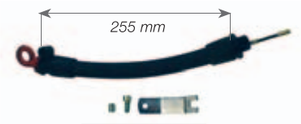

GX 340-390-K18

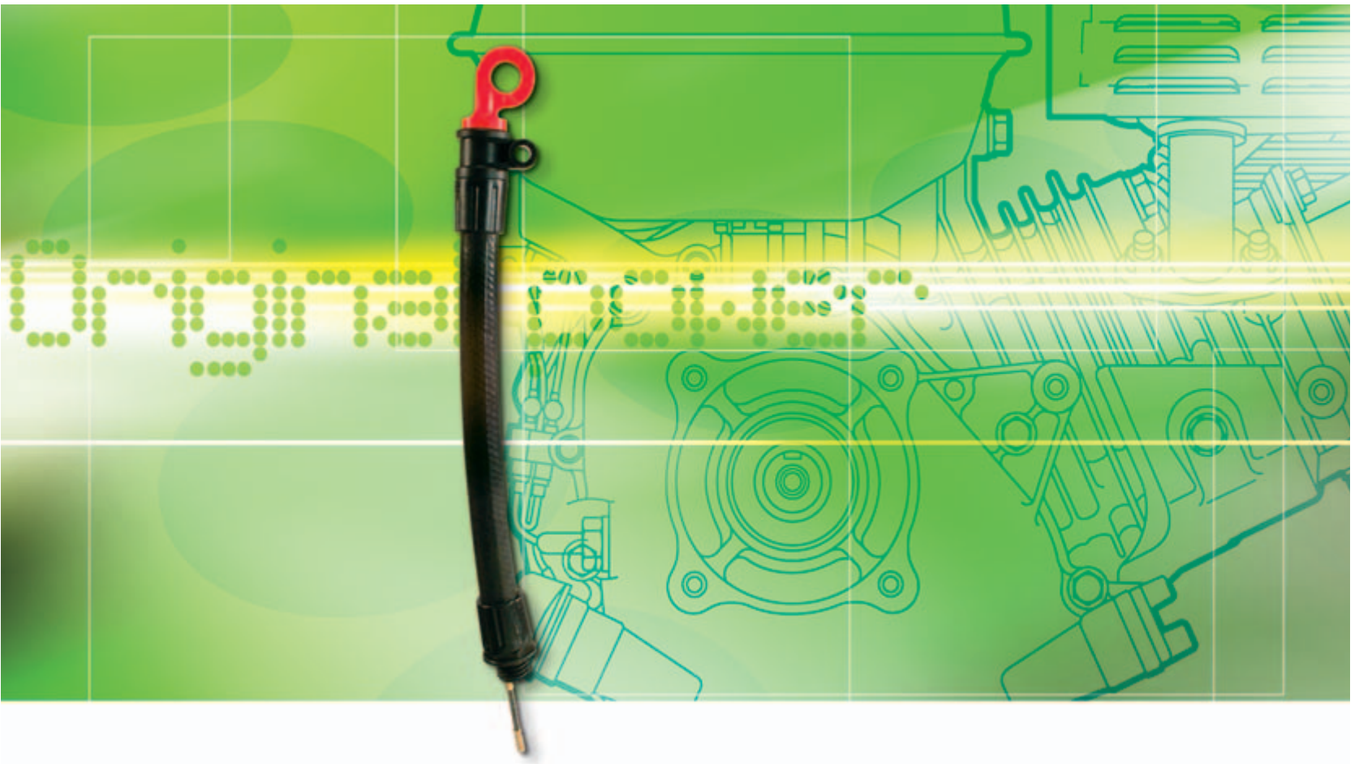

Applicable for GX 240K1, GX 270, GX 340K1, GX 390K1

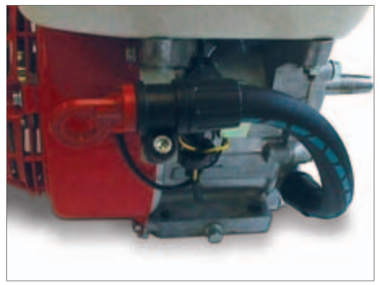

Mounted on front support tank
Applicable for GX 120K1, 120T1 / GX 160K1, 160T1 / GX 200, 200T

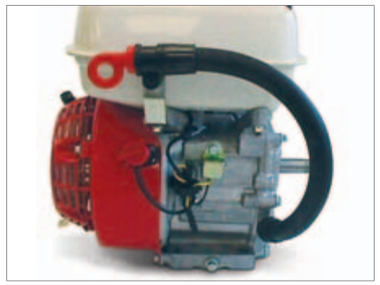

Applicable for GX 240K1 / GX 270, 270T / GX 340K1 / GX 390K1, 390T1

Oil dipstick

Extension of oil level gauge for	Partnumber	Packing
GX 120K1, 120T1 / 160K1, 160T1 / 200, 200T / 240K1 / 270, 270T / 340K1 / 390K1, 390T1	GX 390-K10-01	1 piece/set

REF.	Component name	QTY
1	oil level dipstick	1
2	screw	1
3	collar	1

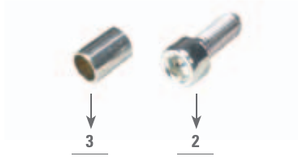

Remark
Mounting on engine not possible / mounting on frame only

En-guard (plastic type) no deflector

Heat protection for	Partnumber	Packing
GX 240K1, GX 270, 270T (silent muffler) and GX 340K1 / GX 390K1, 390T1 (std muffler)	06185-ZF6-W400	1 piece/set

REF.	Component name	QTY
1	muffler cover comp.	1
2	rear muffler cover comp.	1
3	muffler cover base comp.	1
4	muffler cover spacer	3
5	air cleaner case collar	2
6	hex.nut 5mm	3
7	plain washer 5mm	3

REF.	Component name	QTY
8	screw washer 6x20	3
9	tapping screw 5x25	2
10	tapping screw 5x8	1
11	muffler cover stay	1
12	plate set	1
13	screw washer 5x12	1
14	spring washer	1

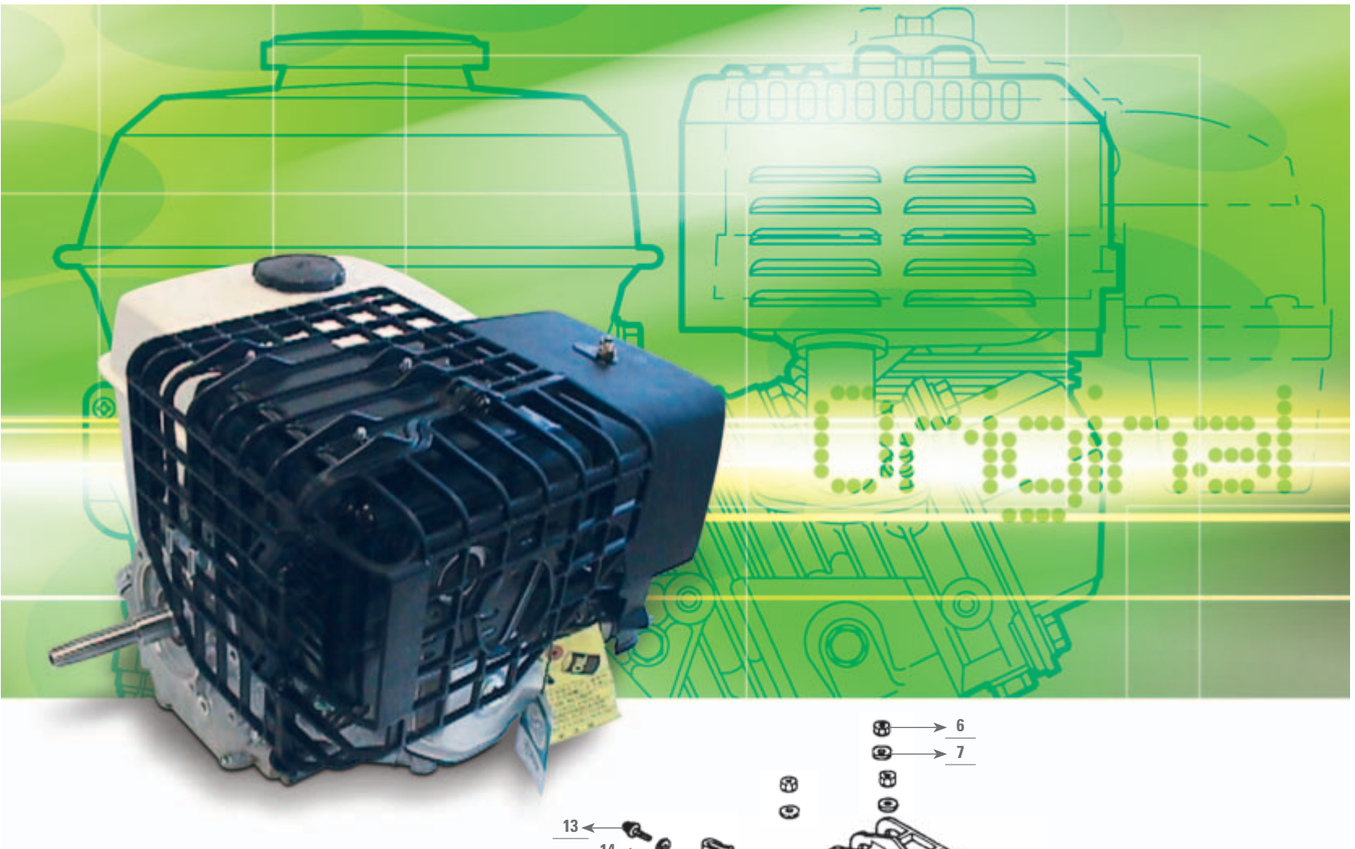

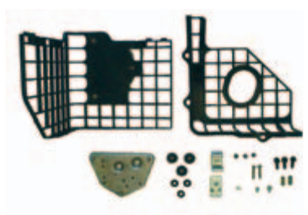

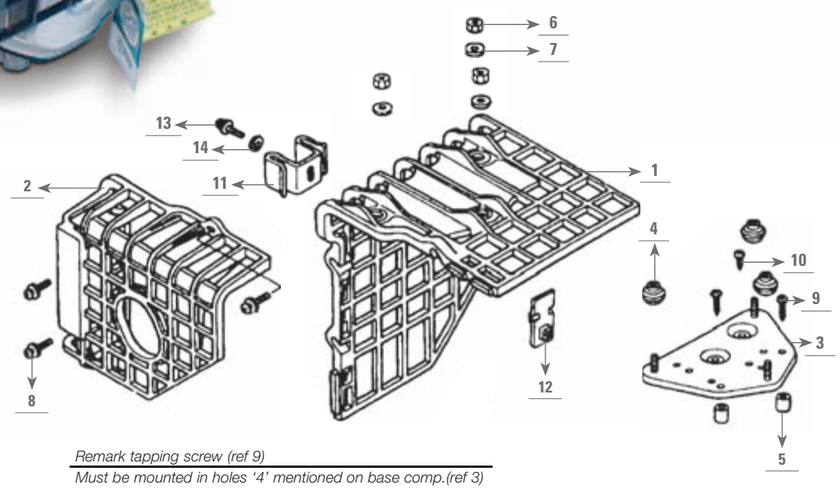

Remark tapping screw (ref 9)
Must be mounted in holes '4' mentioned on base comp.(ref 3)

En-guard (plastic type) with deflector

Heat protection and deflection of exhaust gas for	Partnumber	Packing
GAS FOR GX 240K1 / GX 270, 270T (silent muffler) and GX 340K1 / GX 390K1, 390T1 (std muffler)	06185-ZF6-W500	1 piece/set

REF.	Component name	QTY
1	muffler cover comp.	1
2	rear muffler cover comp.	1
3	muffler cover base comp.	1
4	muffler cover spacer	3
5	air cleaner case collar	2
6	hex.nut 5mm	3
7	plain washer 5mm	3
8	screw washer 6x20	3

REF.	Component name	QTY
9	tapping screw 5x25	2
10	tapping screw 5x8	1
11	muffler cover stay	1
12	plate set	1
13	screw washer 5x12	1
14	spring washer	1
15	deflector	1
16	tapping screw 4x6	2

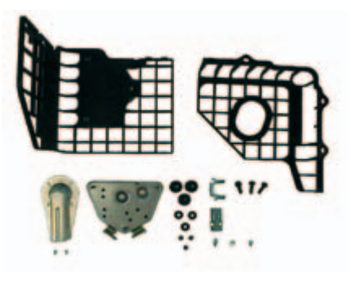

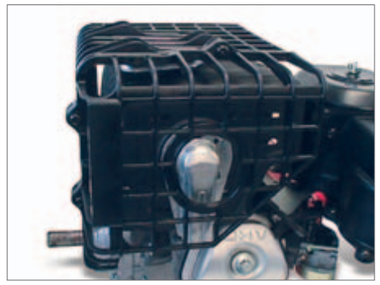

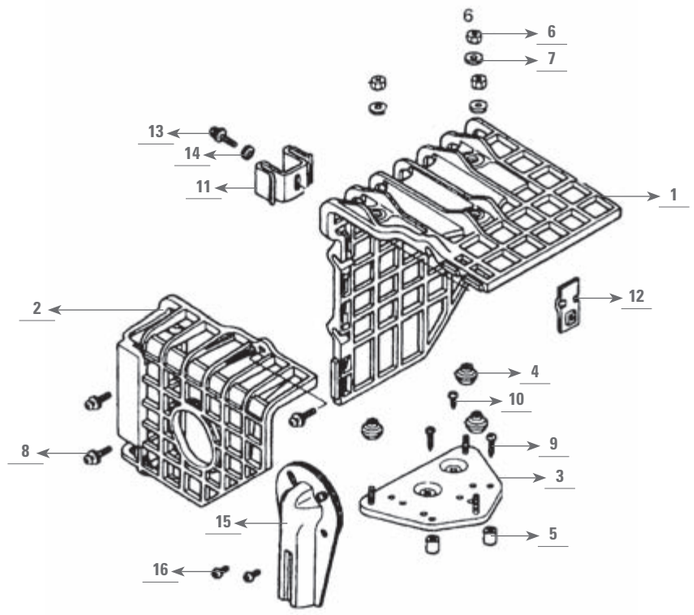

Remark tapping screw (ref 9)
Must be mounted in holes '4' mentioned on base comp.(ref 3)

En-guard (plastic type) no deflector

Heat protection for	Partnumber	Packing
GX 120K1, 120T1 / GX 160K1, 160T1 (std and silent muffler) and GX 200, 200T (std muffler)	06185-ZH8-W400	1 piece/set

REF.	Component name	QTY
1	muffler cover comp.	1
2	rear muffler cover comp.	1
3	muffler cover base comp.	1
4	muffler cover spacer	3
5	air cleaner case collar	2

REF.	Component name	QTY
6	hex.nut 5mm	3
7	plain washer 5mm	3
8	screw washer 6x20	3
9	tapping screw 5x25	2
10	tapping screw 5x8	1

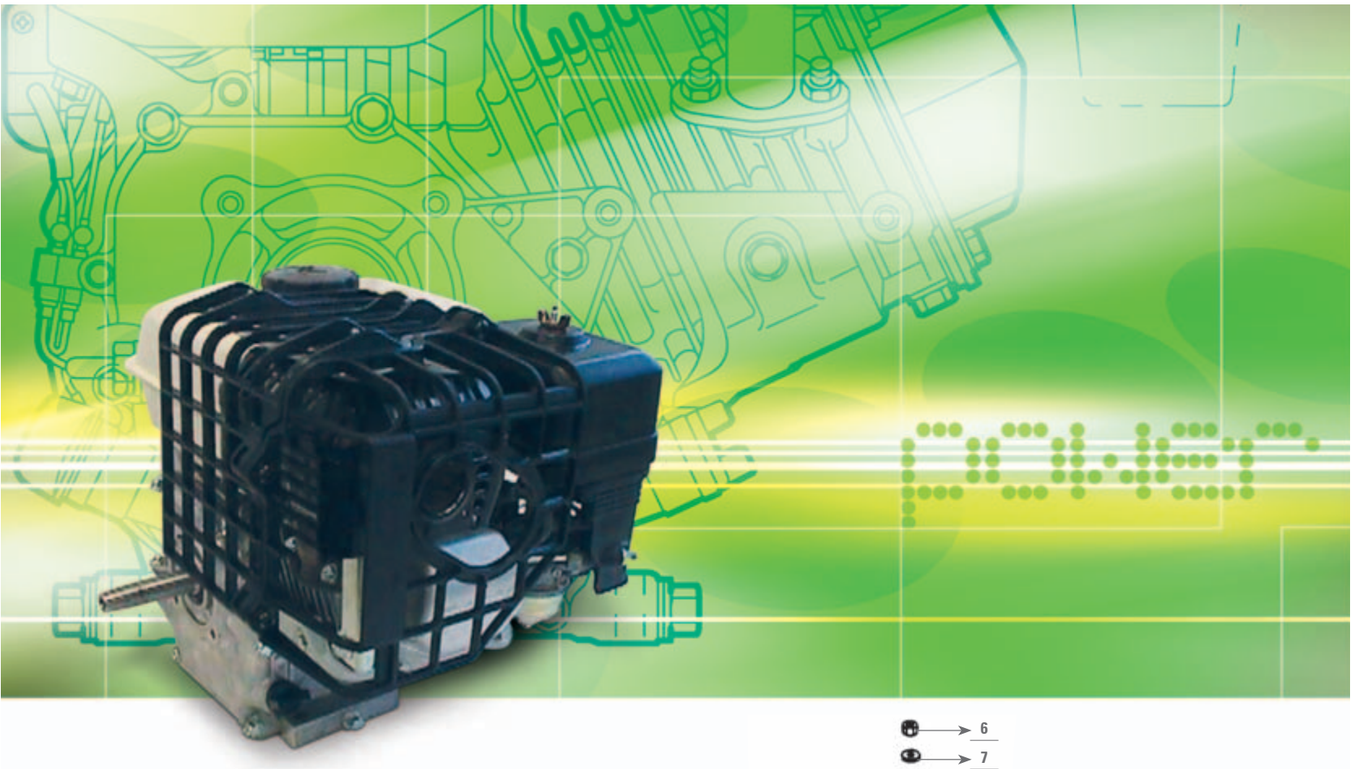

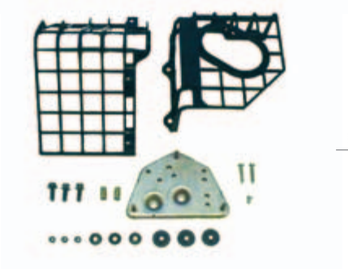

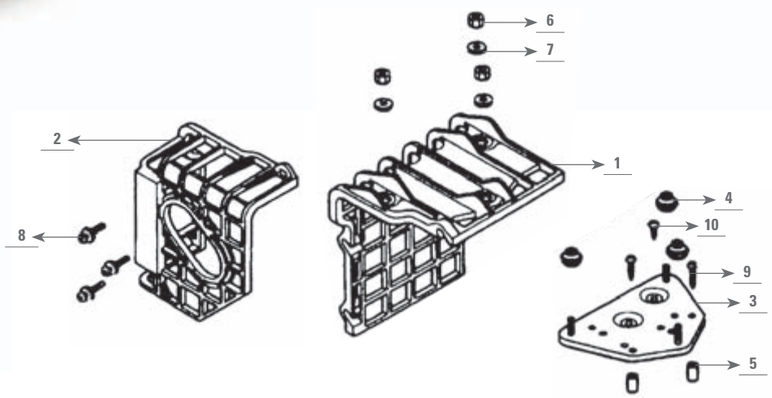

Remark tapping screw (ref 9)
Must be mounted in holes '2' mentioned on base comp.(ref 3)

En-guard (plastic type) with deflector

Heat protection and deflection of exhaust gas for	Partnumber	Packing
FOR GX 120K1, 120T1 /GX 160K1, 160T1 (sdt and silent muffler) and GX 200, 200T (std muffler)	06185-ZH8-W500	1 piece/set

REF.	Component name	QTY
1	muffler cover comp.	1
2	rear muffler cover comp.	1
3	muffler cover base comp.	1
4	muffler cover spacer	3
5	air cleaner case collar	2
6	hex.nut 5mm	3

REF.	Component name	QTY
7	plain washer 5mm	3
8	screw washer 6x20	3
9	tapping screw 5x25	2
10	tapping screw 5x8	1
11	deflector	1
12	tapping screw 4x6	2

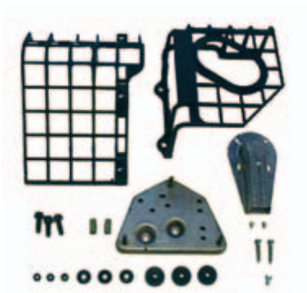

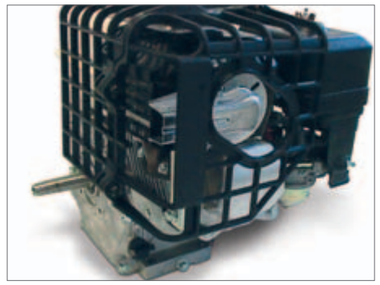

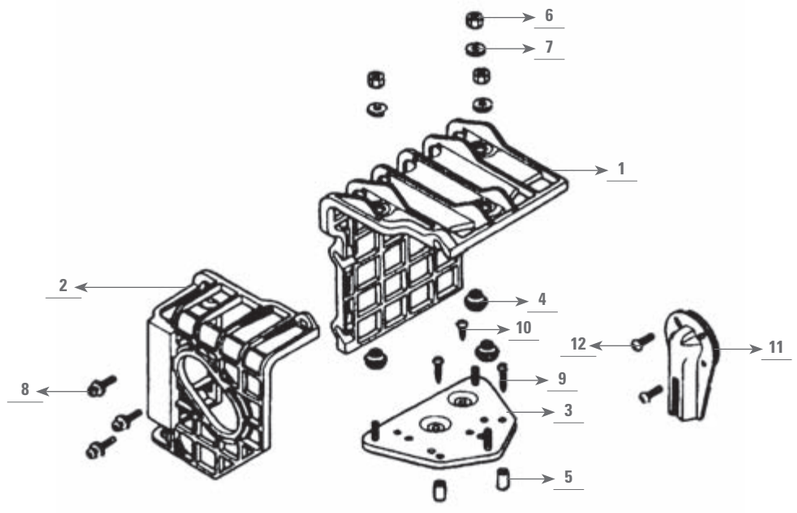

Remark tapping screw (ref 9)
Must be mounted in holes '2' mentioned on base comp.(ref 3)

En-guard (metal type) no deflector

Heat protection for	Partnumber	Packing
GX 120K1, 120T1 / GX 160K1, 160T1 tiller (standard muffler)	06185-ZH8-W600	1 piece/set

REF.	Component name	QTY
1	en-guard	1
2	screw pan	2
3	washer ZM5	2
4	tapping screw 6,3x13	1
5	washer ZM6	1

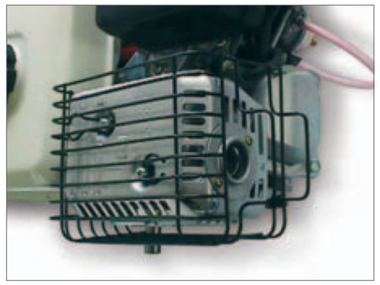

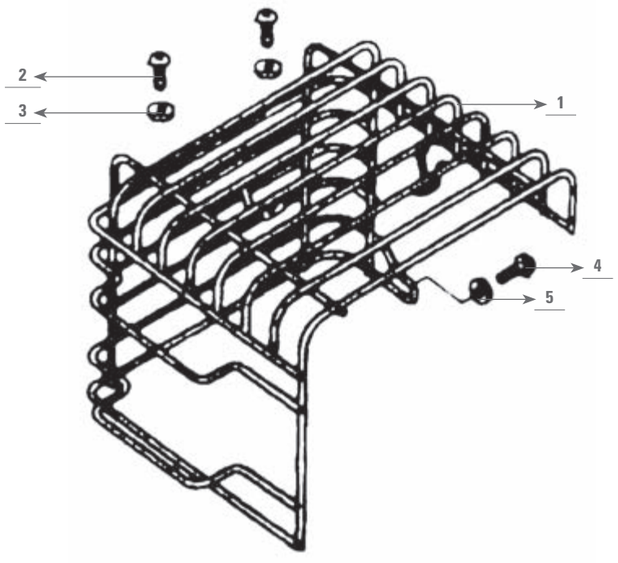

En-guard no deflector

Heat protection for	Partnumber	Packing
GX 240K1 / GX 270, 270T (std muffler)	06185-ZK9-W400	1 piece/set

REF.	Component name	QTY
1	muffler cover comp.	1
2	rear muffler cover comp.	1
3	muffler cover base comp.	1
4	muffler cover spacer	3
5	air cleaner case collar	2
6	hex.nut 5mm	3
7	plain washer 5mm	3

REF.	Component name	QTY
8	screw washer 6x20	3
9	tapping screw 5x25	2
10	tapping screw 5x8	1
11	muffler cover stay	1
12	plate set	1
13	screw washer 5x12	1
14	spring washer	1

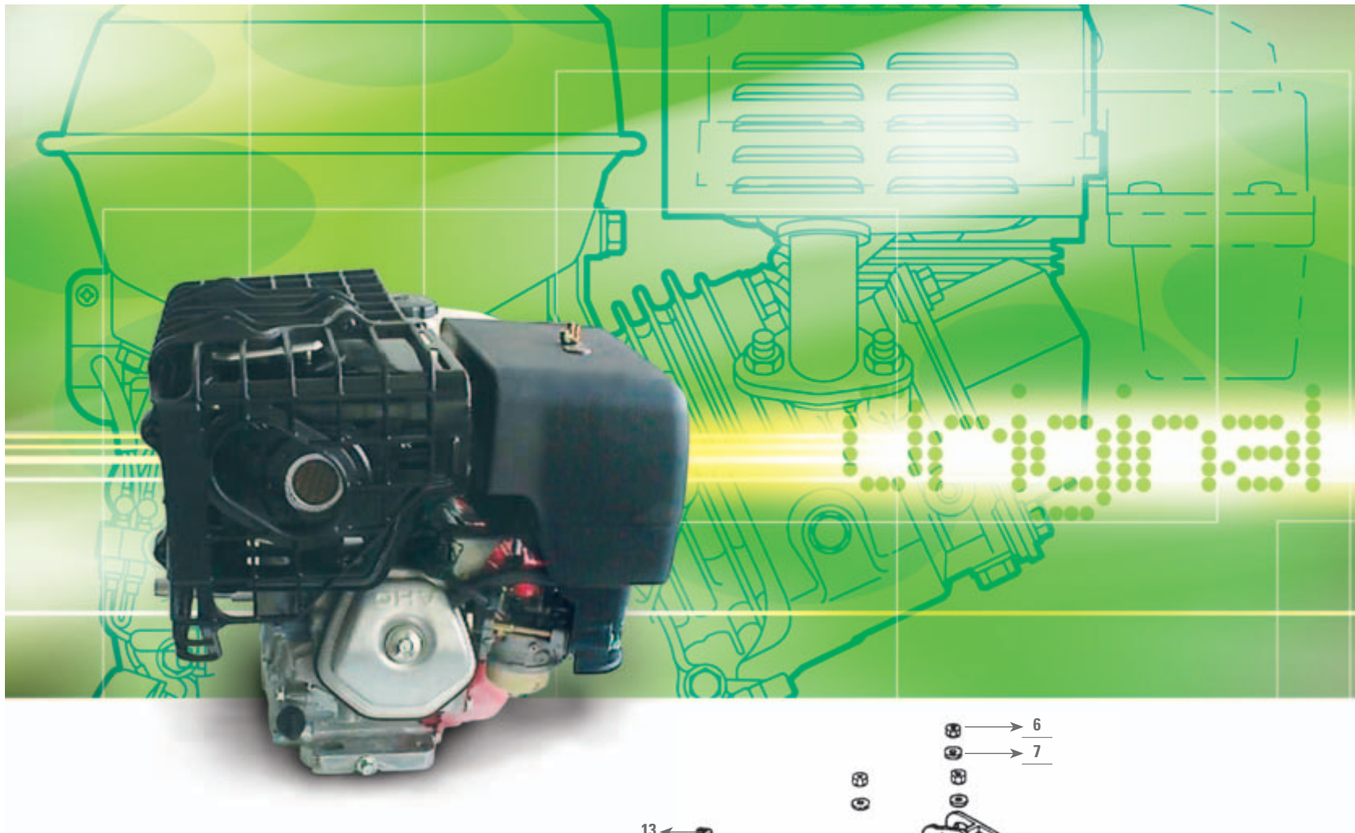

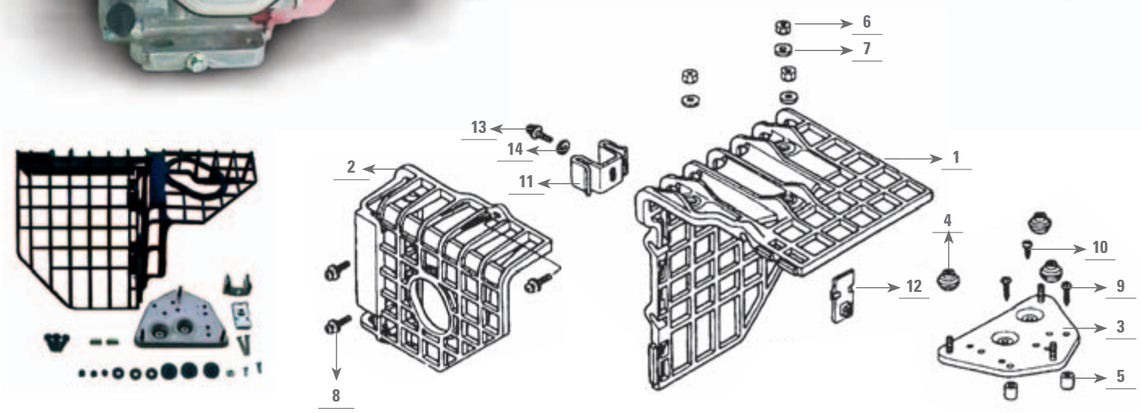

Remark tapping screw (ref 9)
Must be mounted in holes '4' mentioned on base comp.(ref 3)

En-muffler guard (plastic type) with deflector

Heat protection and deflection of exhaust gas for	Partnumber	Packing
GX 240K1 / GX 270, 270T (std muffler)	06185-ZK9-W500	1 piece/set

REF.	Component name	QTY
1	muffler cover comp.	1
2	rear muffler cover comp.	1
3	muffler cover base comp.	1
4	muffler cover spacer	3
5	air cleaner case collar	2
6	hex.nut 5mm	3
7	plain washer 5mm	3
8	screw washer 6x20	3

REF.	Component name	QTY
9	tapping screw 5x25	2
10	tapping screw 5x8	1
11	muffler cover stay	1
12	plate set	1
13	screw washer 5x12	1
14	spring washer	1
15	deflector	1
16	tapping screw 4x6	2

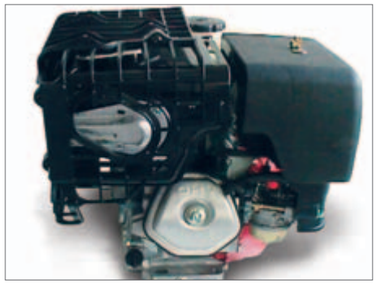

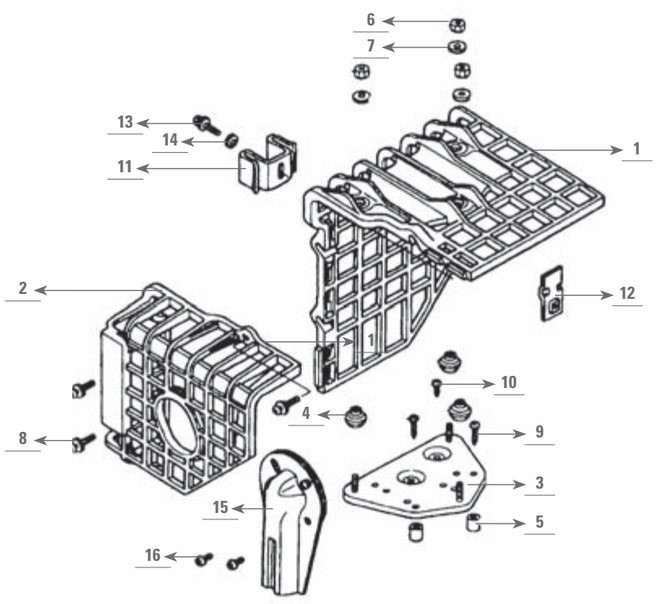

Remark tapping screw (ref 9)
Must be mounted in holes '4' mentioned on base comp.(ref 3)

Universal muffler for v-twin engine

Engine model	Partnumber	Packing
GX(V) 610K1 / 620 K1 / 670, GCV 520 / 530 and GXV 520 / 530	06183-ZJ1-BOSU	1 piece/set

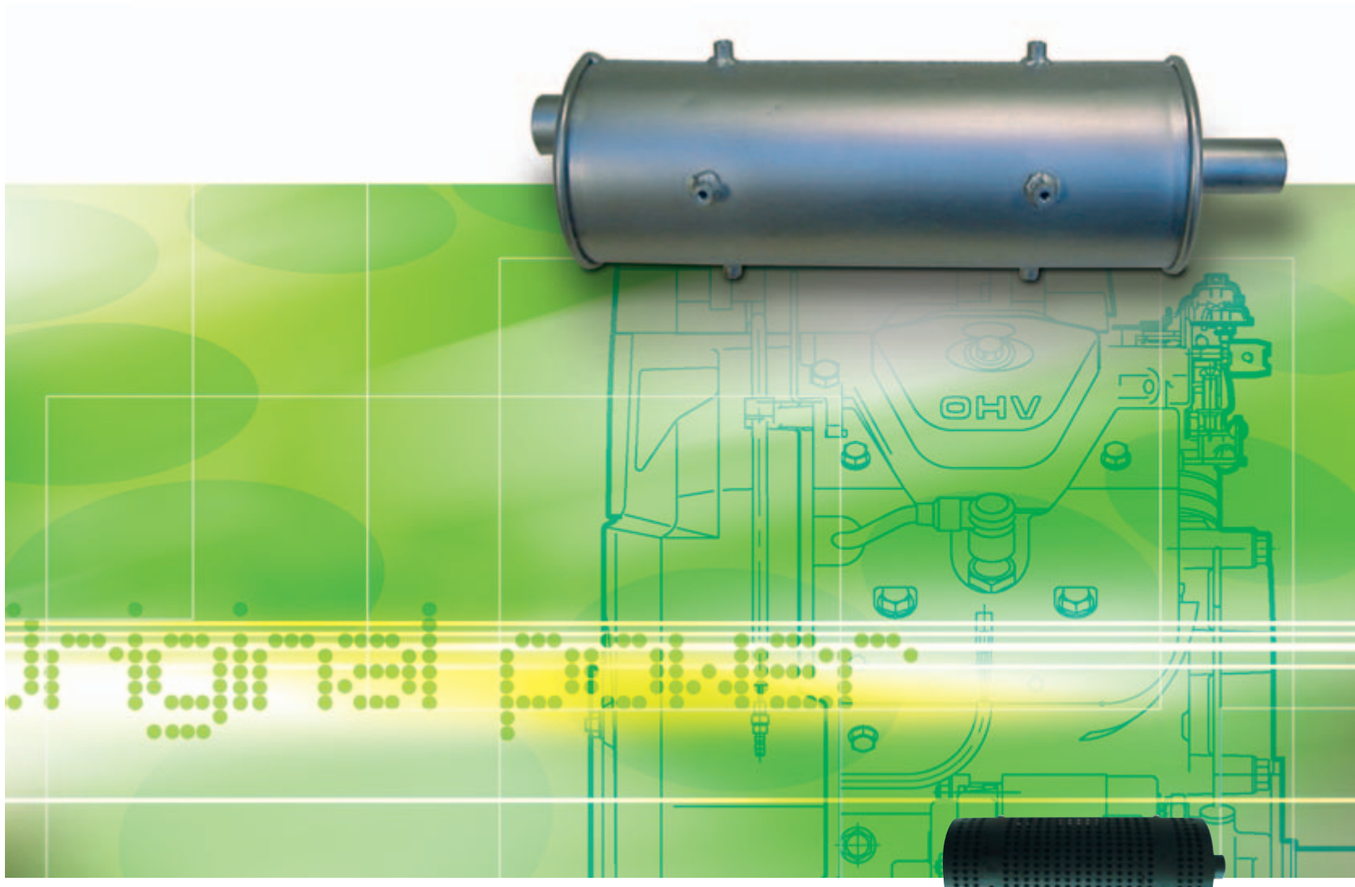

Top mount muffler

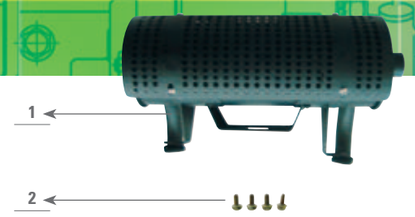

Muffler for	Partnumber	Packing
GX 610K1 / GX 620K1 / GX 670	06183-ZJ1-BOSL	1 piece/set

REF.	Component name	QTY
1	top mount muffler	1
2	mounting bolt	4

Attention
Left = starter motor side exhaust

Top mount muffler

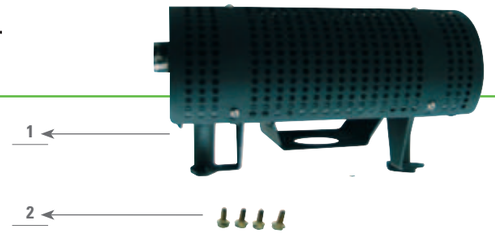

Muffler for	Partnumber	Packing
GX 610K1, GX 620K1, GX 670	06183-ZJ1-BOSR	1 piece/set

REF.	Component name	QTY
1	top mount muffler	1
2	mounting bolt	4

Attention
Right = oil filter side exhaust

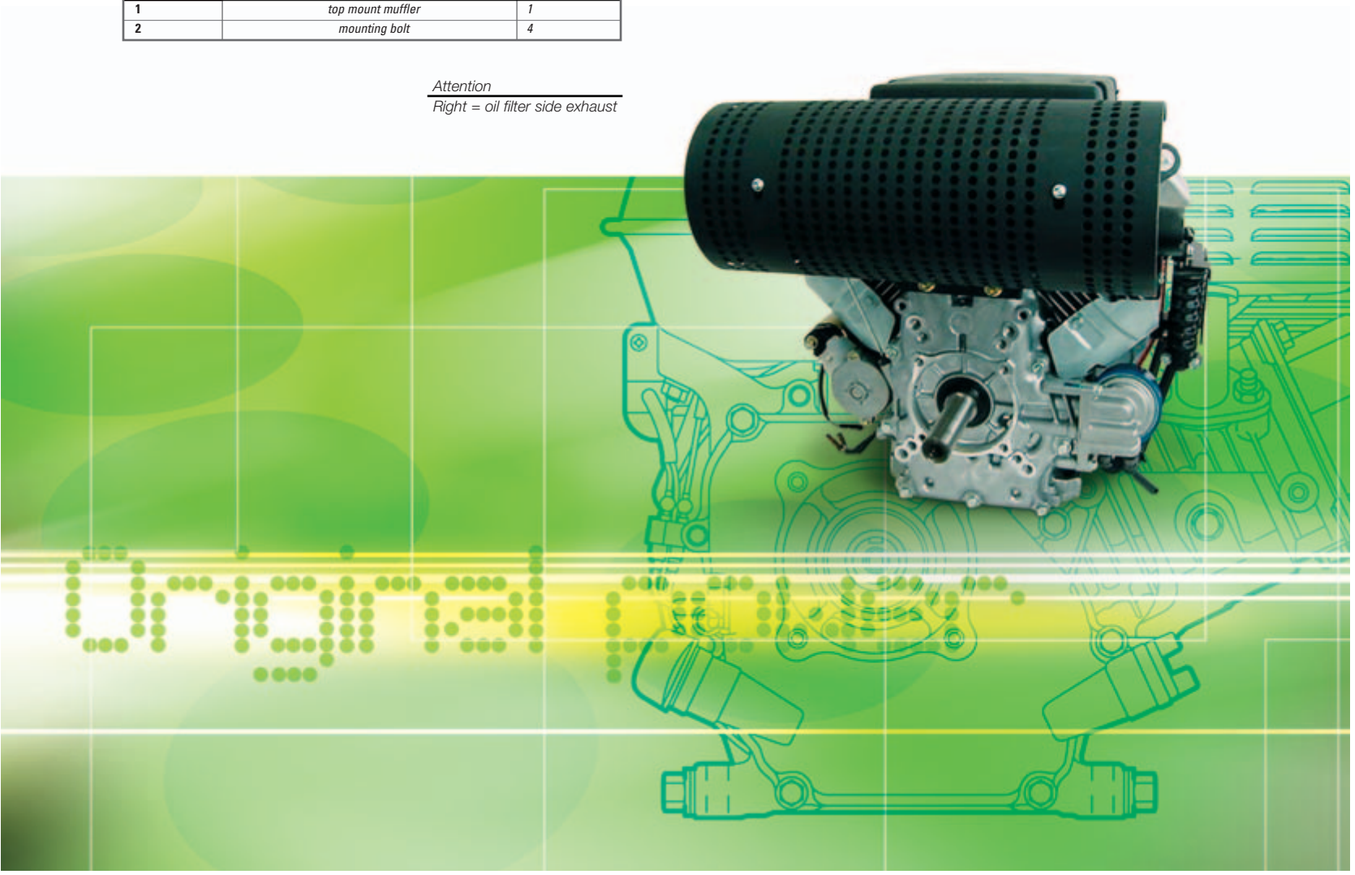

Heat shield

Heat protector plate for	Partnumber	Packing
Top mount muffler on GX 610K1 / GX 620K1 GX 670 equiped with plastic fuel tank	18434-ZJ1-BOS	1 piece/set

Attention
Heat shield installation is obligatory when plastic fuel tank is mounted!

Deflector

90° deflector pipe for top mount muffler on	Partnumber	Packing
GX 610K1 / GX 620K1 / GX 670	18431-ZH8-BOS	1 piece/set

REF.	Component name	QTY
1	deflector	1
2	clamp	1
3	washer	2
4	nut	2

Exhaust flange

Welding flange for exhaust pipe	Partnumber	Packing
GX(V)610 / 620, GX(V)610K1, GX(V)620K1, GX(V)670	GX620-000001	2 pieces/set

Exhaust pipe

Exhaust pipe for	Partnumber	Packing
GCV 520 / 530, GXV 520 / 530	18331-Z0A-SET	2 pieces/set

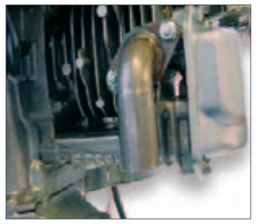

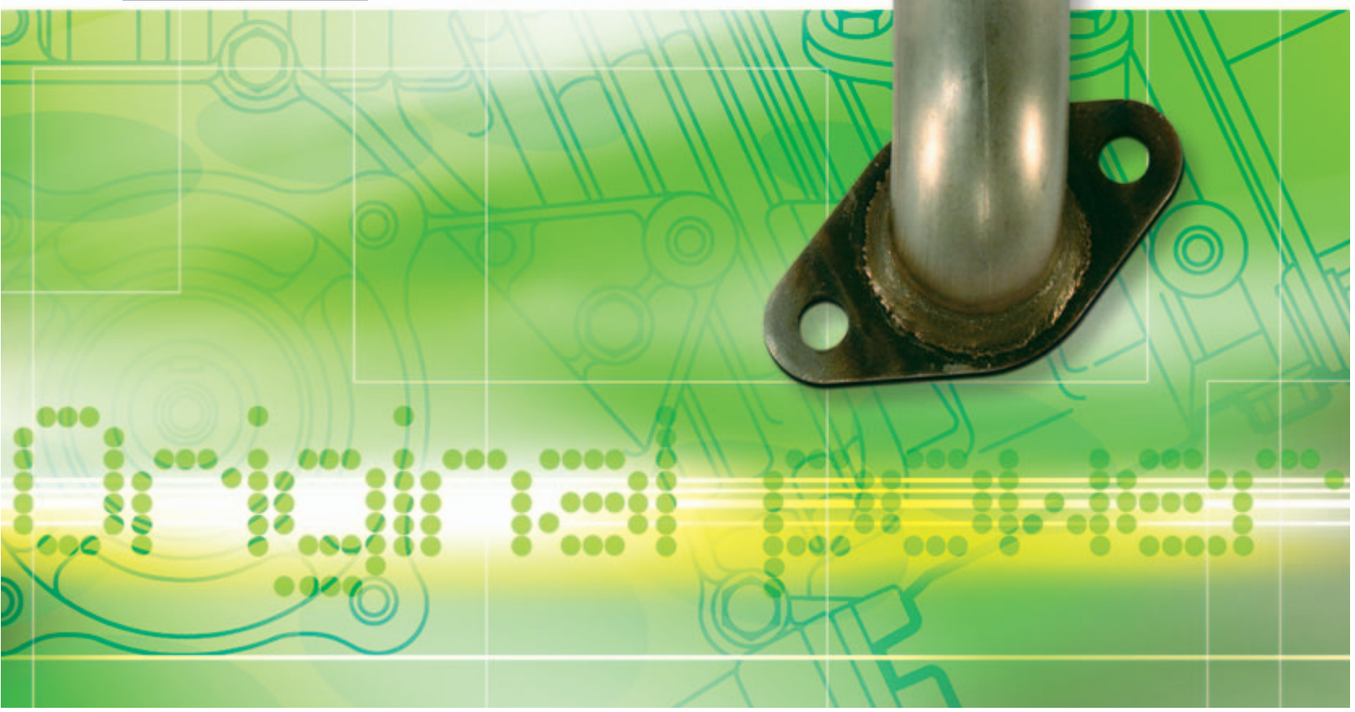

Deflector (long type)

Deflector of exhaust gases for	Partnumber	Packing
GX 120K1, 120T1 / 160K1, 160T1 / 200, 200T / 240K1 / 270, 270T /340K1 / 390K1, 390T1	18431-ZH8-W500	1 piece/set

REF.	Component name	QTY
1	deflector	1
2	tapping screw (M4x6)	4

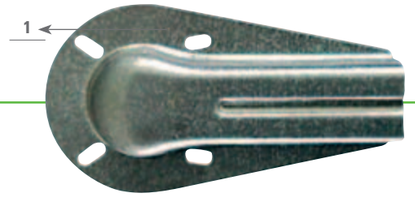

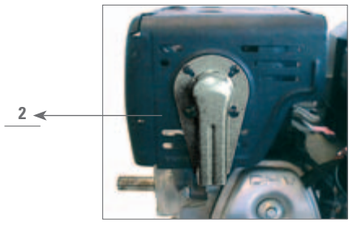

Deflector (short type)

Deflection of exhaust gases for	Partnumber	Packing
GX 120K1, 120T1 / 160K1, 160T1 / 200, 200T / 240K1 / 270, 270T / 340K1 / 390K1, 390T1	GX20-000-00	1 piece/set

REF.	Component name	QTY
1	deflector	1
2	tapping screw (M4x6)	4

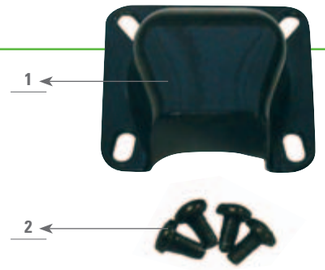

Low noise muffler

Super silent muffler for	Partnumber	Packing
GX 340K1 / GX 390K1, 390T1	18310-ZB8-SIL	1 piece/set

REF.	Component name	QTY
1	muffler comp.	1
2	exhaust pipe	1
3	gasket exhaust pipe	2
4	hex.bolt 8x28	2
5	flange nut 10mm	2

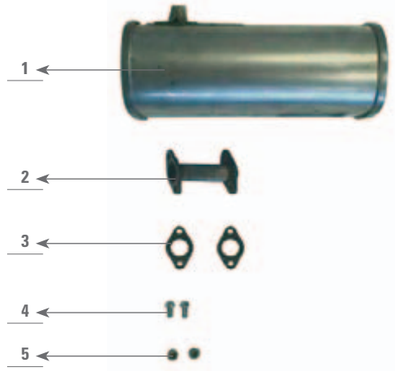

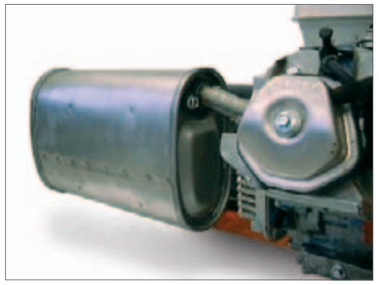

Remark

Flange nut 10mm is used as spacer to tighten the exhaust pipe onto the cylinder head.

Pipe comp., ex. (high-r)

Engine model	Partnumber	Packing
GX610K1 / 620K1 / 670	18330-ZJ1-841	1 piece/set

Pipe comp., ex. (high-l)

Engine model	Partnumber	Packing
GX610K1 / 620K1 / 670	18330-ZJ1-851	1 piece/set

Pipe comp., ex. (side-l)

Engine model	Partnumber	Packing
GX610K1 / 620K1	18330-ZJ1-861	1 piece/set

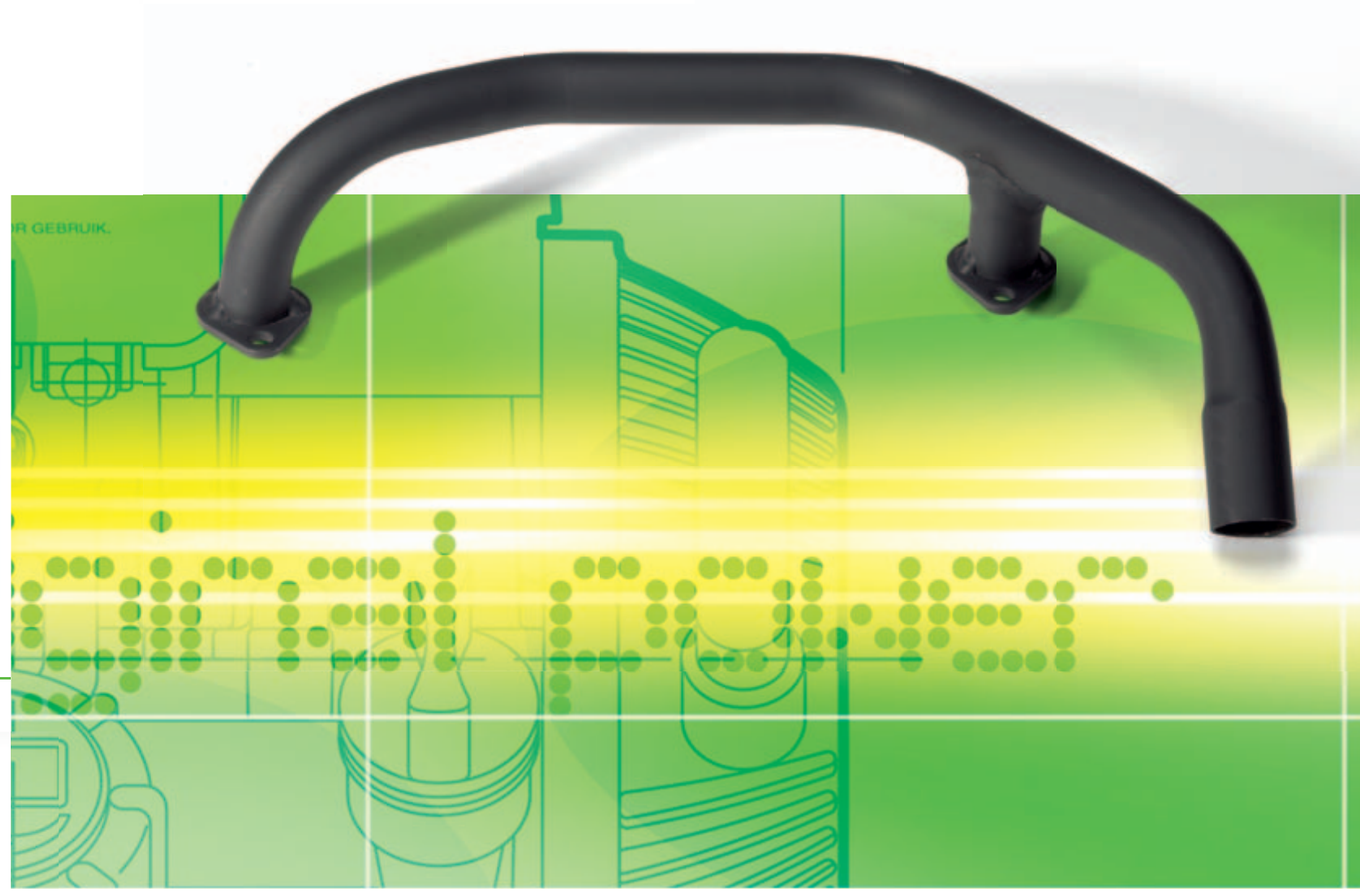

Spark arrester

Engine model	Partnumber	Packing
GX610K1 / GX620K1 / GX670	18355-ZN1-003	1 piece/set

Joint assy., connecting tube

Engine model	Partnumber	Packing
GX610K1 / GX620K1	*17415-ZJ1-840*	*1 piece/set*

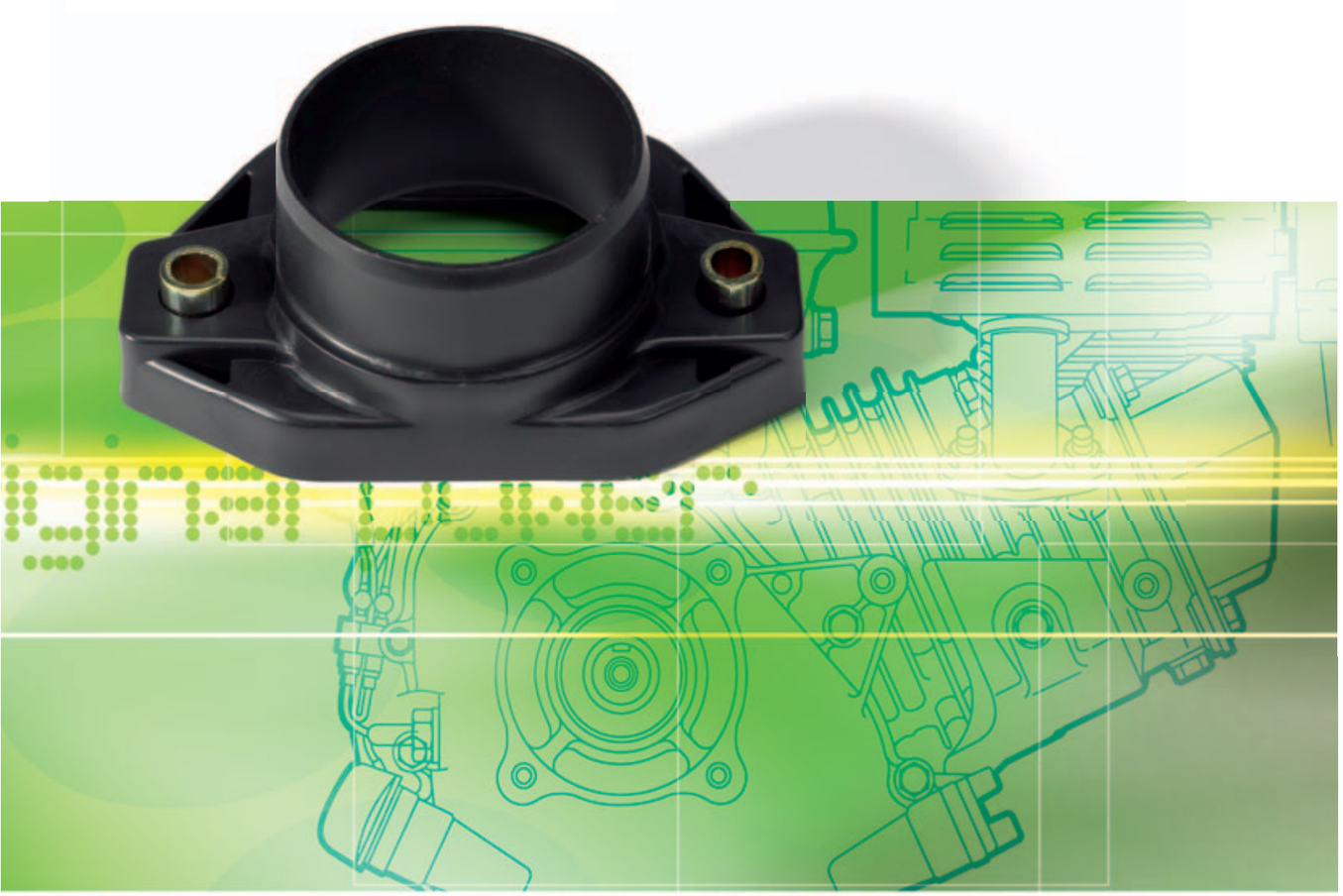

Valve, oil shut-off

Engine model	Partnumber	Packing
GX(V)610 / 620, GX(V)610K1, GX(V)620K1, GX(V)670	*15558-ZJ1-010AH*	*1 piece/set*

Switch, oil pressure

Engine model	Partnumber	Packing
GX(V)610 / 620, GX(V)610K1, GX(V)620K1, GX(V)670	*37240-ZG3-E01*	*1 piece/set*

Dual function hour & tacho meter

Engine model	Partnumber	Packing
All engines	*08174-ZL8-000HE*	*1 piece/set*

Screen grid (P.T.O.)

Engine model	Partnumber	Packing
GX(V)610 / 620, GX(V)610K1, GX(V)620K1, GX(V)670	*28454-ZJ1-KIT*	*1 piece/set*

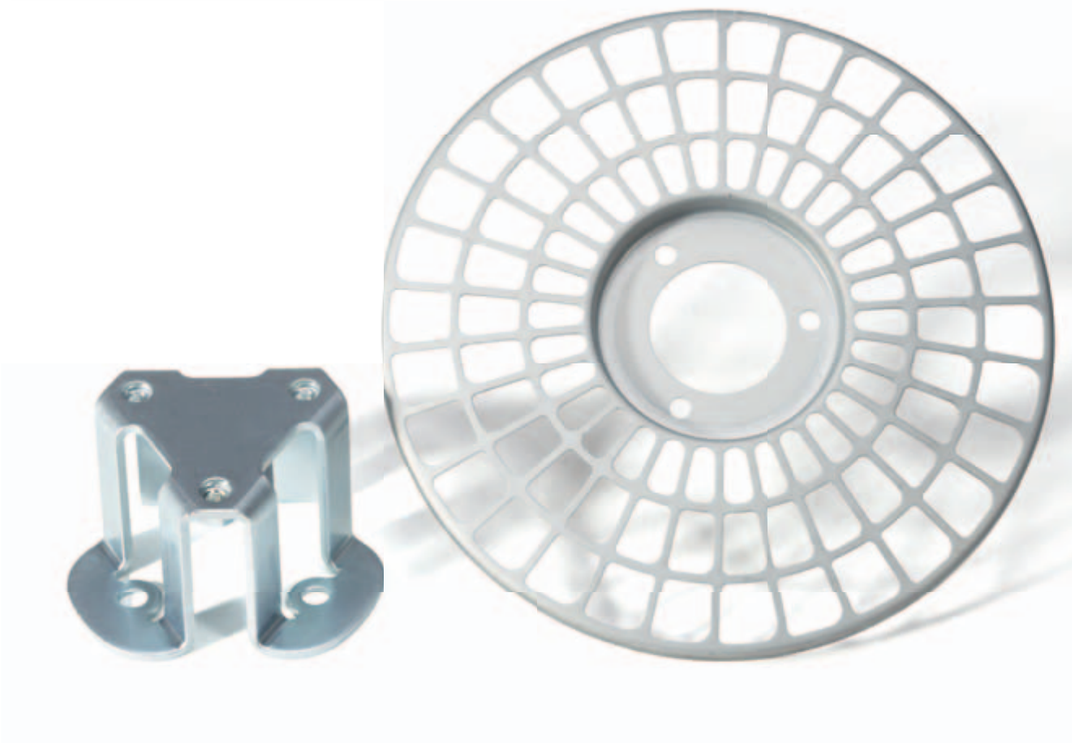

Shaft, fr. P.T.O.

Engine model	Partnumber	Packing
GX620 / GX620K1	*23311-ZJ1-KIT*	*1 piece/set*

REF.	Component name	QTY
23311-ZJ1-H10	*Shaft, fr. P.T.O.*	*1*
90111-KT0-670	*Mounting bolt*	*3*

Switch assy, engine stop

Engine model	Partnumber	Packing
GX440IU	*35120-Z2E-003*	*1 piece/set*

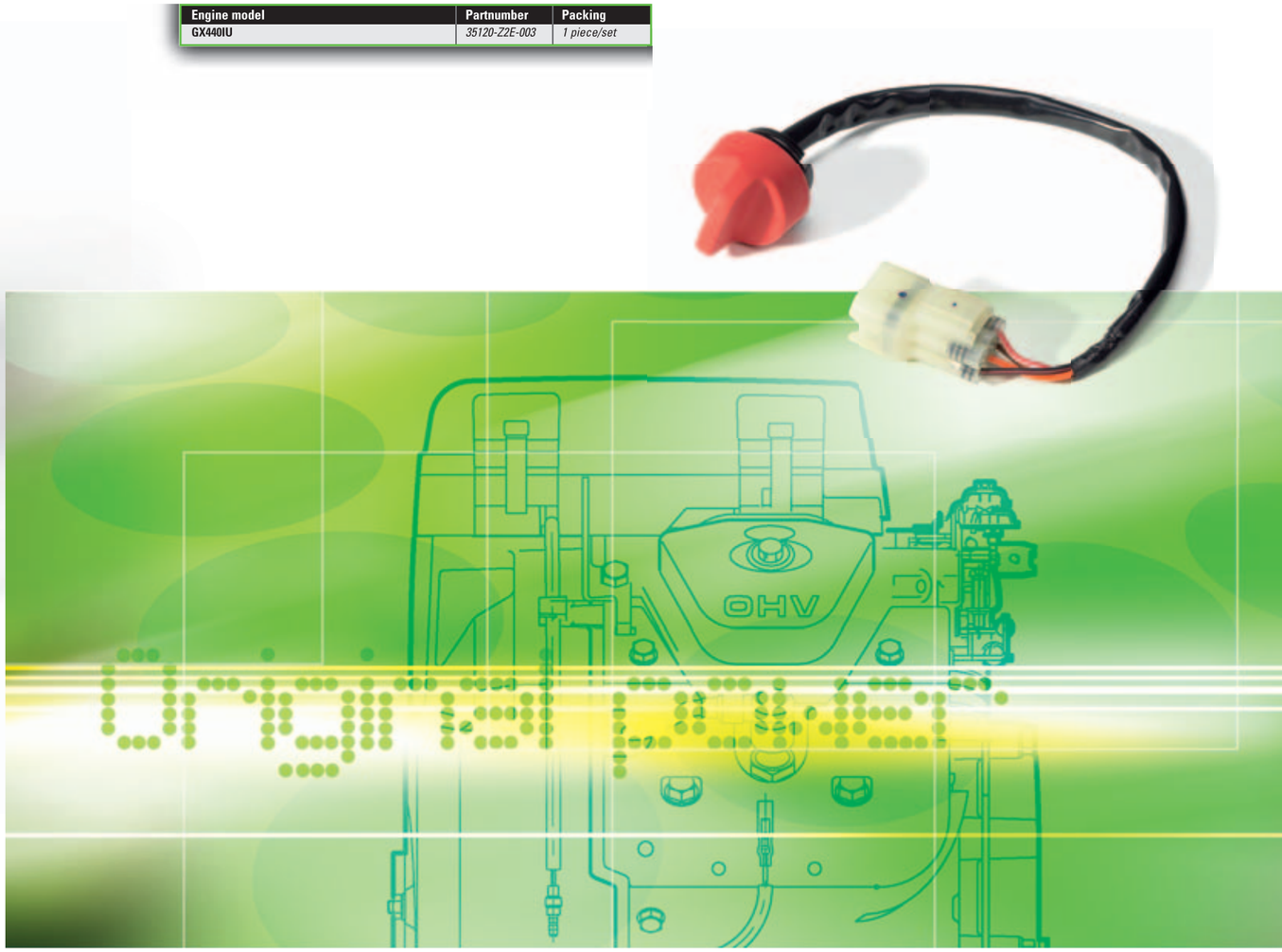

Switch assy combination (remote, with fuse)

Engine model	Partnumber	Packing
GX440IU	*35100-Z2E-003*	*1 piece/set*

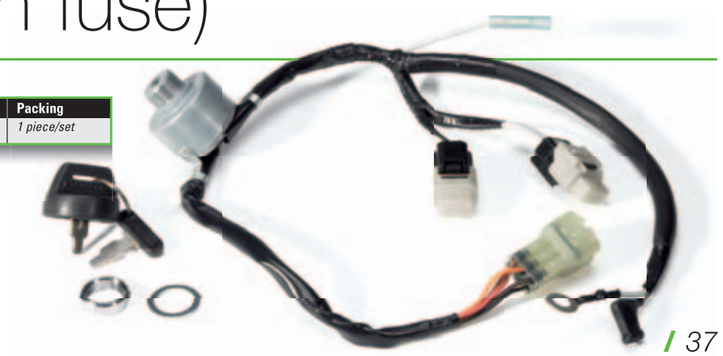

Switch assy combination (remote, w/o fuse)

Engine model	Partnumber	Packing
GX440IU	35100-Z2E-X010	1 piece/set

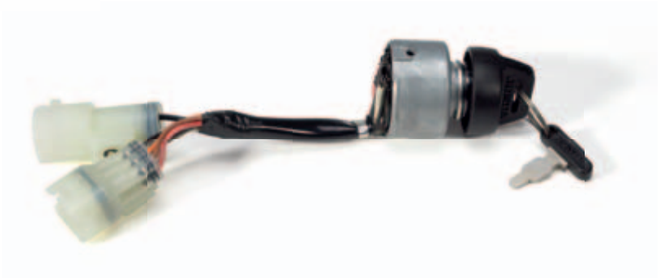

Volume assy, speed

Engine model	Partnumber	Packing
GX440IU	35570-Z2E-004	1 piece/set

Extension harness, for combination switch with fuse

Engine model	Partnumber	Packing
GX440IU	35105-Z2E-X000 (WIRE LENGTH = 200 cm)	1 piece/set

Ext. harness assy, subwire (6p & 3 terminals)

Engine model	Partnumber	Packing
GX440IU	32105-Z2E-X000 (wire length= 300 cm)	1 piece/set

Ext. harness assy, subwire (6p & 6p)

Engine model	Partnumber	Packing
GX440IU	32105-Z2E-X010 (wire length = 300 cm)	1 piece/set

Coupler, short (switch 1 function)

Engine model	Partnumber	Packing
GX440IU	32130-Z2E-0001	1 piece/set

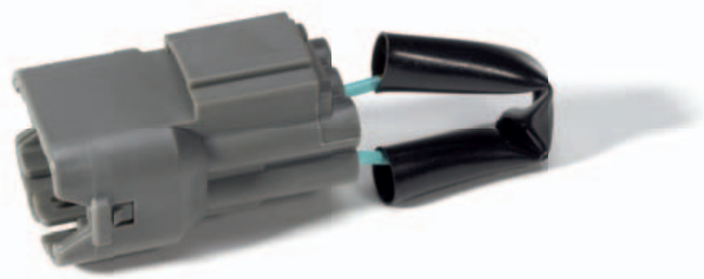

6p, gray (volume switch), male

Engine model	Partnumber	Packing
GX440IU	6187-6809	1 piece/set

Wiring instructions for IGX

- *Wiring for the potentiometer and mode switch should be as short as possible.*
  - *o Honda recommends less than 5m.*
  - *o Less than 2m is recommended for engine switches (combination switch and engine stop switch).*
- *Diameter of wiring should be 0,5 mm².*
- *Refer to the iGX Matching manual for more info on wiring.*

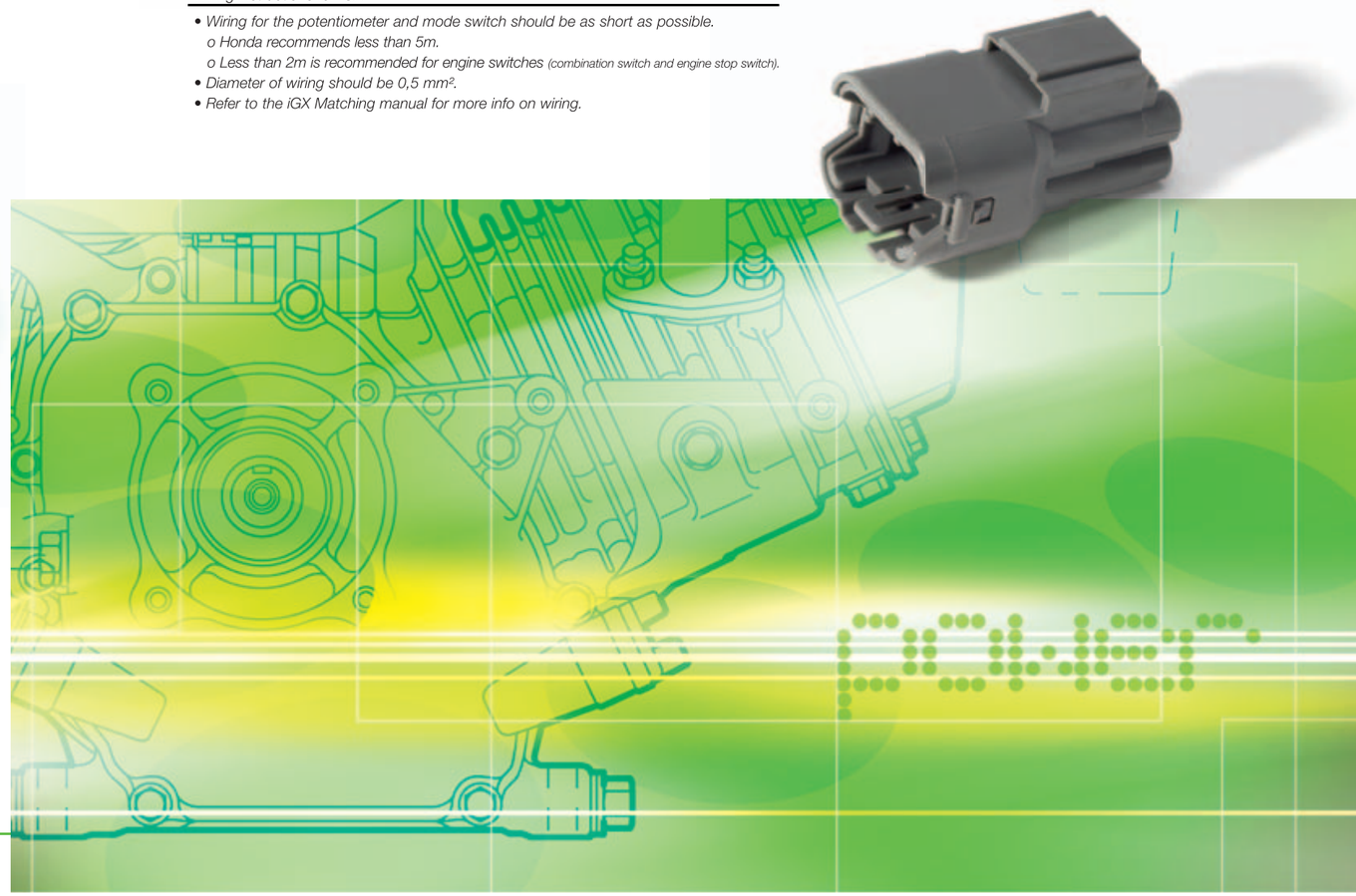

6p, gray (volume switch), female

Engine model	Partnumber	Packing
GX440IU	6180-6187	1 piece/set

Wiring instructions for IGX:

- *Wiring for the potentiometer and mode switch should be as short as possible.*
  - *o Honda recommends less than 5m.*
  - *o Less than 2m is recommended for engine switches (combination switch and engine stop switch).*
- *Diameter of wiring should be 0,5 mm².*
- *Refer to the iGX Matching manual for more info on wiring.*

4p, blue (communication port), male

Engine model	Partnumber	Packing
6187-4445	*6187-4445*	*1 piece/set*

Wiring instructions for IGX

- *Wiring for the potentiometer and mode switch should be as short as possible.*
  - *o Honda recommends less than 5m.*
  - *o Less than 2m is recommended for engine switches (combination switch and engine stop switch).*
- *Diameter of wiring should be 0,5 mm².*
- *Refer to the iGX Matching manual for more info on wiring.*

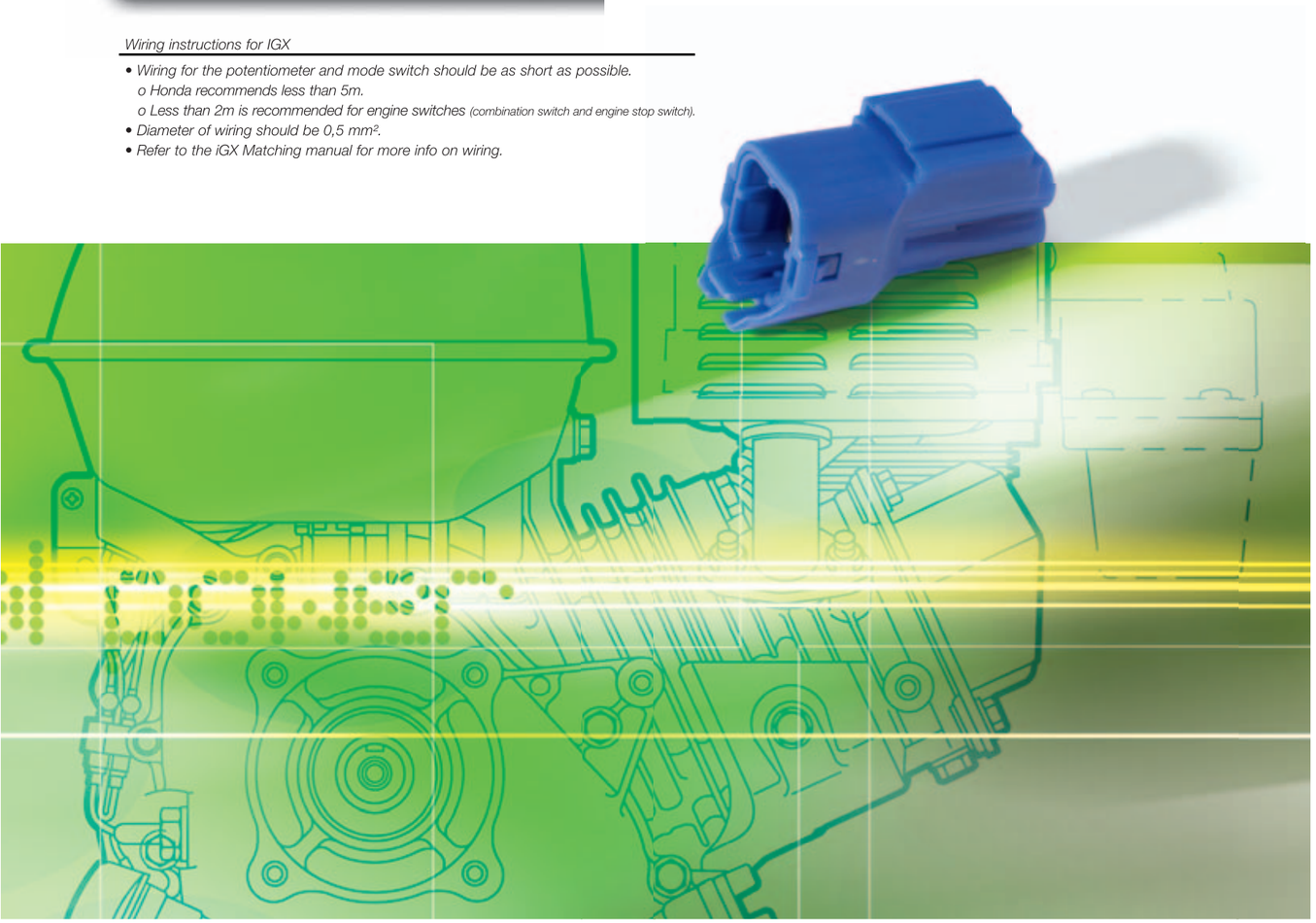

4p, blue (communication port), female

Engine model	Partnumber	Packing
GX440IU	*6180-4185*	*1 piece/set*

Wiring instructions for IGX:

- *Wiring for the potentiometer and mode switch should be as short as possible.*
  - *o Honda recommends less than 5m.*
  - *o Less than 2m is recommended for engine switches (combination switch and engine stop switch).*
- *Diameter of wiring should be 0,5 mm².*
- *Refer to the iGX Matching manual for more info on wiring.*

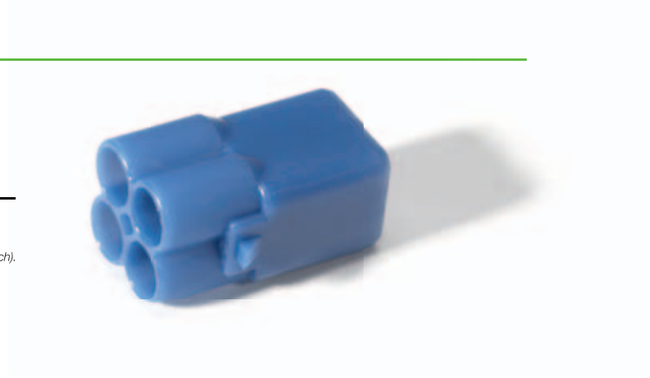

Dummy plug

Engine model	Partnumber	Packing
GX440IU	*7160-9465*	*10 pieces/set*

Wire seal

Engine model	Partnumber	Packing
GX440IU	*7160-8234*	*10 pieces/set*

Terminal, male

Engine model	Partnumber	Packing
GX440IU	*1500-0105*	*10 pieces/set*

Terminal, female

Engine model	Partnumber	Packing
GX440IU	*1500-0106*	*10 pieces/set*

2p coupler kit (female)

Engine model	Partnumber	Packing
GX440IU	*9845F-00002-00*	*1 piece/set*

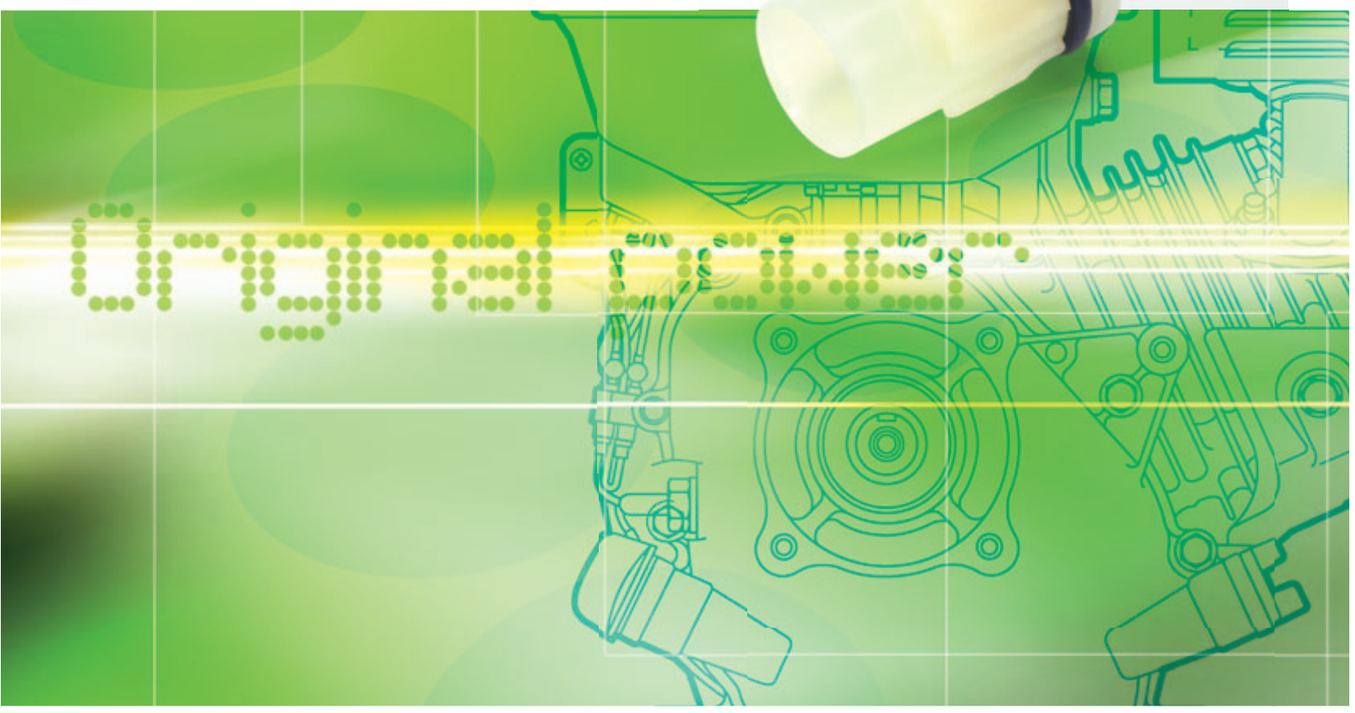

2p coupler kit (male)

Engine model	Partnumber	Packing
GX440IU	*9835F-10002-00*	*1 piece/set*

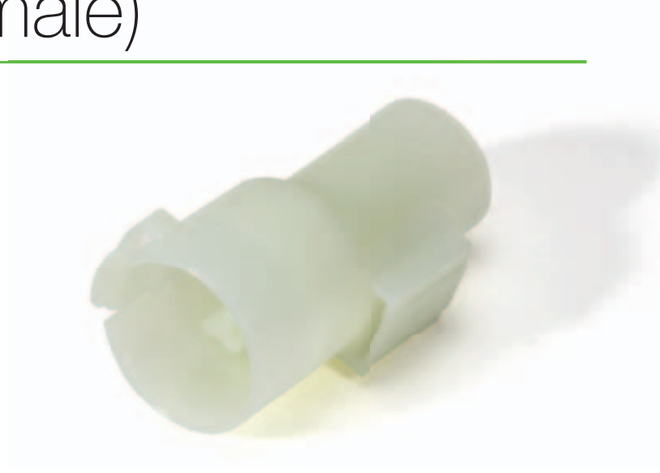

Str govern (overwrite kit)

Engine model	Partnumber	Packing
GX440IU	*IGXST-KIT*	*1 piece/set*

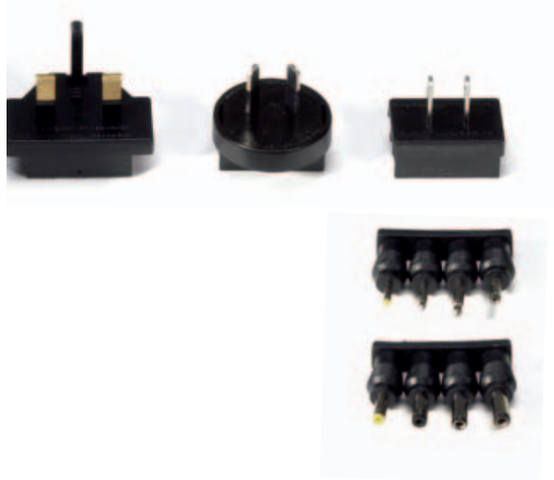

V-twin winter kit

Engine model	Partnumber	Packing
GX610/620	*06192-ZJ1-800*	*1 piece/set*

Can be used if temperature is below 7°C, if temperature is above 7°C then original covers should be mounted again.

ENG IMPORTANT
Every effort has been made to ensure accuracy and comprehensiveness of the information included in this catalogue. However, Honda Europe cannot be held responsible for errors or omissions and for alterations occurred after release for printing.

FR IMPORTANT
Tous les efforts ont été faits pour assurer l'exactitude et l'exhaustivité de l'information contenue dans ce catalogue. Néanmoins, Honda Europe ne peut porter la responsabilité d'erreurs ou d'annulations et de modifications intervenues après l'autorisation d'impression.

D WICHTIG
Die Ihnen vorliegende Information wurde nach bestem Wissen und Gewissen zusammengestellt. Für Irrtümer oder Änderungen und den daraus resultierenden Schäden kann keine Gewähr übernommen werden.

NL BELANGRIJK
Al het mogelijke werd gedaan om de juistheid en volledigheid van de geboden informatie in deze catalogus te garanderen. Honda Europe kan evenwel niet aansprakelijk worden gesteld voor fouten of weglatingen en voor wijzigingen die na de vrijgave voor de druk zijn voorgekomen.

E IMPORTANTE
Se han realizado todos los esfuerzos posibles para garantizar la fiabilidad de este catálogo. No obstante, Honda Europa no se responsabiliza de los errores, omisiones o alteraciones que puedan producirse tras su impresión.

I IMPORTANTE
Tutti gli sforzi sono stati fatti per assicurare l'esattezza e la completezza delle informazioni contenute in questo catalogo. In ogni caso, la società Honda Europe non potrà essere ritenuta responsabile per errori, modifiche o annullamenti verificatisi dopo l'autorizzazione alla stampa.

P IMPORTANTE
Todos os esforços foram feitos para assegurar a exactidão da informação contida neste catálogo. No entanto, a Honda Europe não se responsabiliza por qualquer tipo de erro ou anulação após dada a autorização para impressão.

FI TÄRKEÄÄ
Olemme pyrkineet tekernään tämän luettelon niin täsmälliseksi ja kattavaksi kuin mahdollista. Honda Europe ei kuitenkaan vastaa painatuksen jälkeen tapahtuneista muutoksista.

DK VIGTIGT
Der er lagt stor vægt på at gøre informationerne i dette katalog så korrekt og omfattende som muligt. Honda Europe kan dog ikke stilles til ansvar for fejl eller udeladelser samt ændringer der er sket efter kataloget er frigivet til trykning.

N VIKTIG
Det er lagt stor vekt på å gjøre informasjonen i denne katalogen så korrekt og omfattende som mulig. Honda reserverer seg fra eventuelle trykkfeil samt endringer som har skjedd etter publisering.

S VIKTIGT
Stor vikt har lagts på att göra informationen i denna katalog så korrekt och omfattande som möjligt. Honda reserverar sig för feltryck samt ändringar som gjorts efter att katalogen gått i tryck.

CZ DŮLEŽITÉ
Byla věnována velká pozornost přesnosti a rozsahu informací obsažených v tomto katalogu. Nicméně, Honda Europe nenese odpovědnost za chyby nebo opomenutí a za změny které nastanou po vytištění.